HYUNDAI

OWNER'S MANUAL

Operation
Maintenance
Specifications

All information in this Owner's Manual is current at the time of publication. However, HYUNDAI reserves the right to make changes at any time so that our policy of continual product improvement may be carried out.

This manual applies to all HYUNDAI models and includes descriptions and explanations of optional as well as standard equipment. As a result, you may find material in this manual that does not apply to your specific vehicle.

CAUTION: MODIFICATIONS TO YOUR HYUNDAI

Your HYUNDAI should not be modified in any way. Such modifications may adversely affect the performance, safety or durability of your HYUNDAI and may, in addition, violate conditions of the limited warranties covering the vehicle. Certain modifications may also be in violation of regulations established by the U.S. Department of Transportation and other federal or state agencies.

TWO-WAY RADIO OR CELLULAR TELEPHONE INSTALLATION

Your vehicle is equipped with electronic fuel injection and other electronic components. It is possible for an improperly installed/adjusted two-way radio or cellular telephone to adversely affect electronic systems. For this reason, we recommend that you carefully follow the radio manufacturer's instructions or consult your HYUNDAI dealer for precautionary measures or special instructions if you choose to install one of these devices.

SAFETY AND VEHICLE DAMAGE WARNING

This manual includes information titled as DANGER, WARNING, CAUTION and NOTICE.

These titles indicate the following:

⚠ DANGER

DANGER indicates a hazardous situation which, if not avoided, will result in death or serious injury.

⚠ WARNING

WARNING indicates a hazardous situation which, if not avoided, could result in death or serious injury.

⚠ CAUTION

CAUTION indicates a hazardous situation which, if not avoided, could result in minor or moderate injury.

NOTICE

NOTICE indicates a situation which, if not avoided, could result in vehicle damage.

HYUNDAI VEHICLE OWNER PRIVACY POLICY

Your Hyundai vehicle may be equipped with technologies and services that use information collected, generated, recorded or stored by the vehicle. Hyundai has created a Vehicle Owner Privacy Policy to explain how these technologies and services collect use and share this information.

You may read our Vehicle Owner Privacy Policy on the Hyundaiusa.com website at:
https://www.hyundaiusa.com/owner-privacy-policy.aspx

If you would like to receive a hard copy of our Vehicle Owner Privacy Policy, please contact our Customer Connect Center at:

Hyundai Customer Care
P.O. Box 20850
Fountain Valley, CA 92728
800-633-5151
consumeraffairs@hmausa.com

Hyundai's Customer Connect Center representatives are available Monday through Friday, between the hours of 5:00 AM and 7:00 PM PST and Saturday and Sunday between 6:30 AM and 3:00 PM PST (English).

For Customer Connect Center assistance in Spanish or Korean, representatives are available Monday through Friday between 6:30 AM and 3:00 PM PST.

INTRODUCTION

Congratulations, and thank you for choosing HYUNDAI. We are pleased to welcome you to the growing number of distinguished people who drive HYUNDAIS. We are very proud of the advanced engineering and high-quality construction of each HYUNDAI we build.

Your Owner's Manual will introduce you to the features and operation of your new HYUNDAI. To become familiar with your new HYUNDAI, so that you can fully enjoy it, read this Owner's Manual carefully before driving your new vehicle.

This manual contains important safety information and instructions intended to familiarize you with your vehicle's controls and safety features so you can safely operate your vehicle.

This manual also contains information on maintenance designed to enhance safe operation of the vehicle. It is recommended that all service and maintenance on your car be performed by an authorized HYUNDAI dealer. HYUNDAI dealers are prepared to provide high-quality service, maintenance and any other assistance that may be required.

This Owner's Manual should be considered a permanent part of your vehicle, and should be kept in the vehicle so you can refer to it at any time. The manual should stay with the vehicle if you sell it to provide the next owner with important operating, safety and maintenance information.

HYUNDAI MOTOR AMERICA

⚠ CAUTION

Severe engine and transmission damage may result from the use of poor quality fuels and lubricants that do not meet HYUNDAI specifications. You must always use high quality fuels and lubricants that meet the specifications listed on Page 8-7 in the Vehicle Specifications section of the Owner's Manual.

Copyright 2018 HYUNDAI Motor America. All rights reserved. No part of this publication may be reproduced, stored in any retrieval system or transmitted in any form or by any means without the prior written permission of HYUNDAI Motor America.

GUIDE TO HYUNDAI GENUINE PARTS

1. What are HYUNDAI Genuine Parts?

HYUNDAI Genuine Parts are the same parts used by HYUNDAI Motor Company to manufacture vehicles. They are designed and tested for the optimum safety, performance, and reliability for our customers.

2. Why should you use genuine parts?

HYUNDAI Genuine Parts are engineered and built to meet rigid manufacturing requirements. Damage caused by using imitation, counterfeit or used salvage parts is not covered under the HYUNDAI New Vehicle Limited Warranty or any other HYUNDAI warranty.

In addition, any damage to or failure of HYUNDAI Genuine Parts caused by the installation or failure of an imitation, counterfeit or used salvage part is not covered by any HYUNDAI Warranty.

3. How can you tell if you are purchasing HYUNDAI Genuine Parts?

Look for the HYUNDAI Genuine Parts Logo on the package (see below).

HYUNDAI Genuine Parts exported to the U.S. are packaged with labels written only in English.

HYUNDAI Genuine Parts are only sold through authorized HYUNDAI Dealerships.

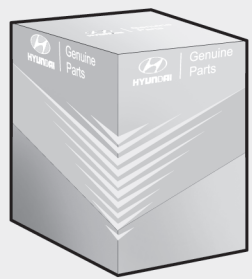

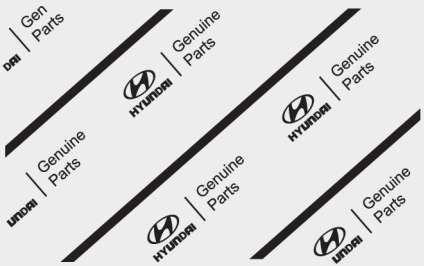

HOW TO USE THIS MANUAL

We want to help you get the greatest possible driving pleasure from your vehicle. Your Owner's Manual can assist you in many ways. To gain an overview of the contents of your Owner's Manual, use the Table of Contents in the front of the manual. The first page of each Chapter includes a detailed Table of Contents of the topics in that Chapter.

To quickly locate information about your vehicle, use the Index in the back of the manual. It is an alphabetical list of what is in this manual and the page number where it can be found.

For your convenience, we have incorporated tabs on the right-hand page edges. These tabs are coded with the Chapter titles to assist you with navigating through the manual.

SAFETY MESSAGES

Your safety, and the safety of others, is very important. This Owner's Manual provides you with many safety precautions and operating procedures. This information alerts you to potential hazards that may hurt you or others, as well as damage to your vehicle.

Safety messages found on vehicle labels and in this manual describe these hazards and what to do to avoid or reduce the risks.

Warnings and instructions contained in this manual are for your safety. Failure to follow safety warnings and instructions can lead to serious injury or death.

Throughout this manual DANGER, WARNING, CAUTION, NOTICE and the SAFETY ALERT SYMBOL will be used.

This is the safety alert symbol. It is used to alert you to potential physical injury hazards. Obey all safety messages that follow this symbol to avoid possible injury or death. The safety alert symbol precedes the signal words DANGER, WARNING and CAUTION.

⚠ DANGER

DANGER indicates a hazardous situation which, if not avoided, will result in death or serious injury.

⚠ WARNING

WARNING indicates a hazardous situation which, if not avoided, could result in death or serious injury.

⚠ CAUTION

CAUTION indicates a hazardous situation which, if not avoided, could result in minor or moderate injury.

NOTICE

NOTICE indicates a situation which, if not avoided, could result in vehicle damage.

FUEL REQUIREMENTS

Your new vehicle is designed to obtain maximum performance with UNLEADED FUEL, as well as minimize exhaust emissions and spark plug fouling.

Your new vehicle is designed to use only unleaded fuel having an octane number ((R+M)/2) of 87 (Research Octane Number 91) or higher. (Do not use methanol blended fuels)

NOTICE

To prevent damage to the engine and engine components, never add any fuel system cleaning agents to the fuel tank other than what has been specified.

Consult an authorized HYUNDAI dealer for additional information.

⚠ WARNING

- **Do not "top off" after the nozzle automatically shuts off when refueling.**
- **Always check that the fuel cap is installed securely to prevent fuel spillage in the event of an accident.**

Gasoline containing alcohol or methanol

Gasohol, a mixture of gasoline and ethanol (also known as grain alcohol) are being marketed along with or instead of leaded or unleaded gasoline. For example, "E15" is a gasohol comprised of 15% ethanol and 85% gasoline.

Do not use gasohol containing more than 15% ethanol, and do not use gasoline or gasohol containing any methanol. Either of these fuels may cause drivability problems and damage to the fuel system, engine control system and emission control system.

Discontinue using gasohol of any kind if drivability problems occur.

"E85" fuel is an alternative fuel comprised of 85 percent ethanol and 15 percent gasoline, and is manufactured exclusively for use in Flexible Fuel Vehicles. "E85" is not compatible with your vehicle. Use of "E85" may result in poor engine performance and damage to your vehicle's engine and fuel system. HYUNDAI recommends that customers do not use fuel with an ethanol content exceeding 15 percent.

NOTICE

To prevent damage to your vehicle's engine and fuel system:

- **Never use gasohol which contains methanol.**
- **Never use gasohol containing more than 15% ethanol.**
- **Never use leaded fuel or leaded gasohol.**
- **Never use "E85" fuel.**

Your New Vehicle Limited Warranty does not cover damage to the fuel system or any performance problems caused by the use of "E85" fuel.

Using Fuel Additives (except Detergent Fuel Additives)

Using fuel additives such as:

- Silicone fuel additive
- Ferrocene (iron-based) fuel additive
- Other metallic-based fuel additives

may result in cylinder misfire, poor acceleration, engine stalling, damage to the catalyst, or abnormal corrosion, and may cause damage to the engine resulting in a reduction in the overall life of the powertrain.

- The Malfunction Indicator Lamp (MIL) may illuminate.

NOTICE

Damage to the fuel system or performance problem caused by the use of these fuels or fuel additives may not be covered by your New Vehicle Limited Warranty.

Gasoline containing MMT

Some gasoline contains harmful manganese-based fuel additives such as MMT (Methylcyclopentadienyl Manganese Tricarbonyl).

HYUNDAI does not recommend the use of gasoline containing MMT.

This type of fuel can reduce vehicle performance and affect your emission control system.

The malfunction indicator lamp on the cluster may come on.

Detergent Fuel Additives

HYUNDAI recommends that you use good quality gasolines treated with detergent additives such as TOP TIER Detergent Gasoline, which help prevent deposit formation in the engine. These gasolines will help the engine run cleaner and enhance performance of the Emission Control System. For more information on TOP TIER Detergent Gasoline, please go to the website (www.toptiergas.com).

For customers who do not use TOP Tier Detergent Gasoline regularly, and have problems starting or the engine does not run smoothly, detergent-based fuel additives that you can purchase separately may be added to the gasoline. If TOP TIER Detergent Gasoline is not available, one bottle of additive added to the fuel tank according to the maintenance schedule is recommended (refer to the Maintenance Schedule in chapter 7).

Additives are available from your authorized HYUNDAI dealer along with information on how to use them. Do not mix other additives.

Operation in foreign countries

If you are going to drive your vehicle in another country, be sure to:

- Observe all regulations regarding registration and insurance.
- Determine that acceptable fuel is available.

VEHICLE MODIFICATIONS

- This vehicle should not be modified. Modification of your vehicle could affect its performance, safety or durability and may even violate governmental safety and emissions regulations.

  In addition, damage or performance problems resulting from any modification may not be covered under warranty.
- If you use unauthorized electronic devices, it may cause the vehicle to operate abnormally, wire damage, battery discharge and fire. For your safety, do not use unauthorized electronic devices.

VEHICLE BREAK-IN PROCESS

By following a few simple precautions for the first 600 miles (1,000 km) you may add to the performance, economy and life of your vehicle.

- Do not race the engine.
- While driving, keep your engine speed (rpm, or revolutions per minute) between 2,000 rpm and 4,000 rpm.
- Do not maintain a single speed for long periods of time, either fast or slow. Varying engine speed is needed to properly break-in the engine.
- Avoid hard stops, except in emergencies, to allow the brakes to seat properly.

⚠ WARNING

CALIFORNIA PROPOSITION 65 WARNING

Items contained in motor vehicles or emitted from them are known to the State of California to cause cancer and birth defects or reproductive harm. These include:

- **Gasoline and its vapors**
- **Engine exhaust**
- **Used engine oil**
- **Interior passenger compartment components and materials**
- **Component parts which are subject to heat and wear**

In addition, battery posts, terminals and related accessories contain lead, lead compounds and other chemicals known to the State of California to cause cancer and reproductive harm.

VEHICLE DATA COLLECTION AND EVENT DATA RECORDERS

This vehicle is equipped with an event data recorder (EDR). The main purpose of an EDR is to record, in certain crash or near crash-like situations, such as an air bag deployment or hitting a road obstacle, data that will assist in understanding how a vehicle's systems performed. The EDR is designed to record data related to vehicle dynamics and safety systems for a short period of time, typically 30 seconds or less. The EDR in this vehicle is designed to record such data as:

- **How various systems in your vehicle were operating;**
- **Whether or not the driver and passenger safety belts were buckled/fastened;**
- **How far (if at all) the driver was depressing the accelerator and/or brake pedal; and,**
- **How fast the vehicle was traveling.**

These data can help provide a better understanding of the circumstances in which crashes and injuries occur. NOTE: EDR data are recorded by your vehicle only if a non-trivial crash situation occurs; no data are recorded by the EDR under normal driving conditions and no personal data (e.g., name, gender, age, and crash location) are recorded. However, other parties, such as law enforcement, could combine the EDR data with the type of personally identifying data routinely acquired during a crash investigation.

To read data recorded by an EDR, special equipment is required, and access to the vehicle or the EDR is needed. In addition to the vehicle manufacturer, other parties, such as law enforcement, that have the special equipment, can read the information if they have access to the vehicle or the EDR.

TABLE OF CONTENTS

Your vehicle at a glance	1
Safety system of your vehicle	2
Convenient features of your vehicle	3
Multimedia System	4
Driving your vehicle	5
What to do in an emergency	6
Maintenance	7
Specifications, Consumer Information and Reporting Safety Defects	8
Index	I

Your vehicle at a glance

1

Exterior Overview 1-2
Interior Overview 1-4
Instrument Panel Overview 1-5
Engine Compartment 1-6

EXTERIOR OVERVIEW

■ Front view

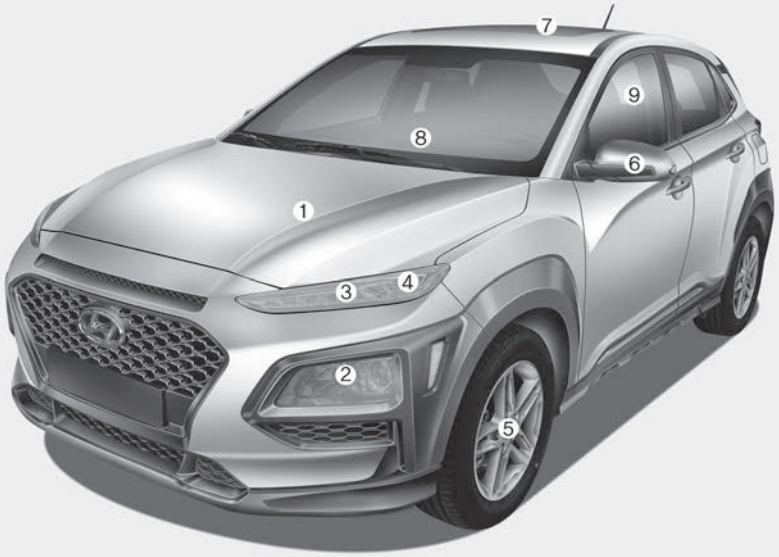

The actual shape may differ from the illustration.

1. Hood 3-41
2. Headlamp 3-89, 7-69
3. Daytime running light (DRL).....3-88
4. Turn signal lamp 7-69
5. Tires and wheels 7-38
6. Side view mirror 3-31
7. Sunroof.....3-37
8. Wiper blade 7-32
9. Windows 3-33

OOS017001

■ Rear view

The actual shape may differ from the illustration.

1. Door 3-13
2. Fuel filler door 3-44
3. Rear combination lamp 7-75
4. Turn signal lamp, Back-up lamp 7-75
5. Liftgate 3-42
6. High mounted stop lamp 7-77
7. Defroster.....3-129
8. Rearview monitor 3-103
9. Antenna 4-2

OOS017002

INTERIOR OVERVIEW

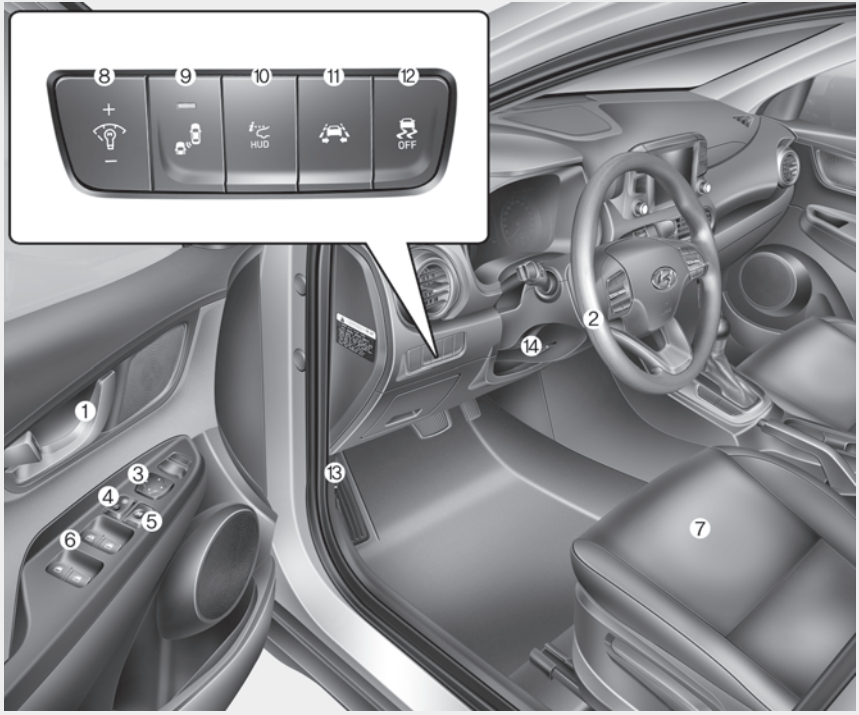

1. Inside door handle 3-14
2. Steering wheel 3-19
3. Side view mirror control 3-32
4. Central door lock switch 3-15
5. Power window lock switch.....3-36
6. Power window switches 3-33
7. Seat.....2-3
8. Instrument panel illumination control switch 3-48
9. Blind-spot Collision Warning (BCW) system 5-48
10. Head-up display button.....3-86
11. Lane keeping assist (LKA) system 5-67
12. ESC OFF button 5-34
13. Hood release lever 3-41
14. Steering wheel tilt/telescopic lever 3-20

The actual shape may differ from the illustration.

OOS017003N

INSTRUMENT PANEL OVERVIEW

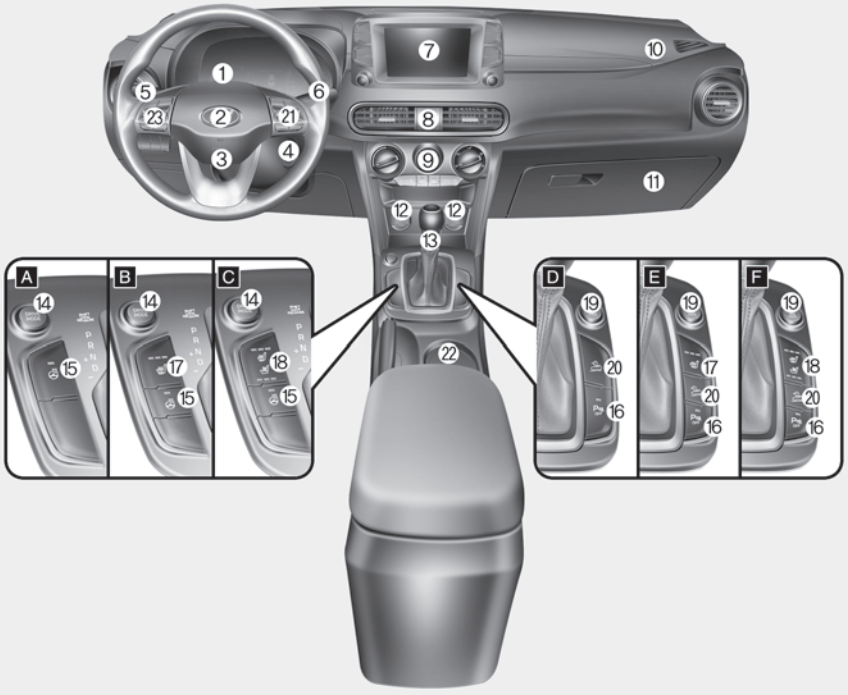

The actual shape may differ from the illustration.

1. Instrument cluster 3-47
2. Horn 3-20
3. Driver's front air bag 2-47
4. Key ignition switch/ 5-6
Engine Start/Stop button 5-9
5. Light control/Turn signals 3-88
6. Wiper/Washer 3-99
7. Audio system/Navigation system 4-4
8. Hazard warning flasher switch 6-2
9. Manual climate control system/ 3-108
Automatic climate control system 3-116
10. Passenger's front air bag 2-47
11. Glove box 3-131
12. Power outlet 3-135
13. Automatic transmission shift lever/
Dual clutch transmission
shift lever 5-14, 5-20
14. Drive mode button 5-45
15. Heated steering wheel 3-21
16. Parking Distance Warning (Reverse)
OFF button 3-105
17. Seat warmer 2-18
18. Seat warmer/Air ventilation seat.....2-19
19. AWD lock button 5-39
20. DBC button 5-36
21. Cruise control buttons/switch 5-78
22. Cup holder 3-133
23. Steering wheel audio controls/ 4-3
Bluetooth® wireless technology
hands-free controls.....4-4

[A-F] : Type A ~ Type F

OOS017004N

ENGINE COMPARTMENT

■ **Gamma 1.6 T-GDI**

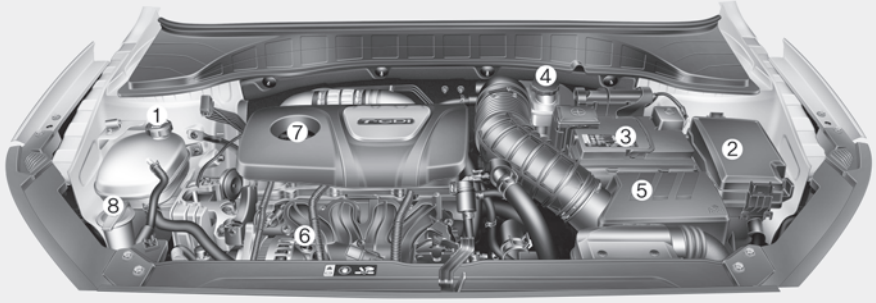

■ **Nu 2.0 MPI**

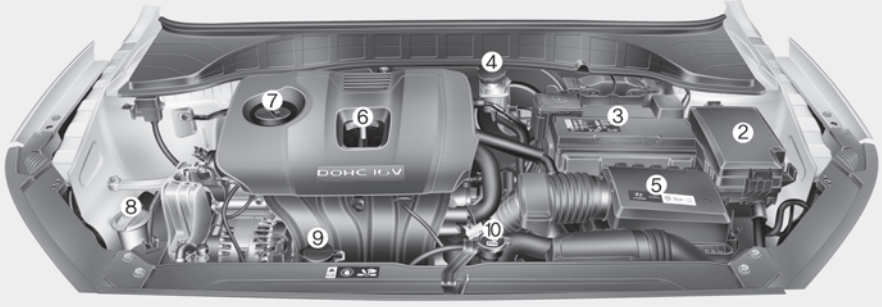

The actual engine compartment in the vehicle may differ from the illustration.

1. Engine coolant reservoir/ Engine coolant cap 7-23
2. Fuse box 7-54
3. Battery 7-35
4. Brake fluid reservoir.....7-27
5. Air cleaner.....7-29
6. Engine oil dipstick.....7-21
7. Engine oil filler cap 7-22
8. Windshield washer fluid reservoir.....7-28
9. Engine coolant reservoir.....7-23
10. Engine coolant cap 7-23

OOS077001/OOS077071N

Safety system of your vehicle

This chapter provides you with important information about how to protect yourself and your passengers. It explains how to properly use your seats and seat belts, and how your air bags work. Additionally, this chapter explains how to properly restrain infants and children in your vehicle.

2

Important Safety Precautions 2-2
- Always Wear Your Seat Belt 2-2
- Restrain All Children 2-2
- Air Bag Hazards 2-2
- Driver Distraction 2-2
- Control Your Speed 2-2
- Keep Your Vehicle in Safe Condition 2-2

Seats 2-3
- Safety Precautions 2-4
- Front Seats 2-5
- Rear Seats 2-11
- Head Restraints 2-14
- Seat Warmers and Air Ventilation Seats 2-18

Seat Belts 2-21
- Seat Belt Safety Precautions 2-21
- Seat Belt Warning Light 2-22
- Seat Belt Restraint System 2-23
- Additional Seat Belt Safety Precautions 2-30
- Care of Seat Belts 2-33

Child Restraint System (CRS) 2-34
- Children Always in the Rear 2-34
- Selecting a Child Restraint System (CRS) 2-35
- Installing a Child Restraint System (CRS) 2-37

Air Bag
- Advanced Supplemental Restraint System 2-45
- Where Are the Air Bags? 2-47
- How Does the Air Bag System Operate? 2-50
- What to Expect After an Air Bag Inflates 2-55
- Occupant Classification System (OCS) 2-56
- Why Didn't My Air Bag Go Off in a Collision? 2-61
- SRS Care 2-66
- Additional Safety Precautions 2-67
- Air Bag Warning Labels 2-67

IMPORTANT SAFETY PRECAUTIONS

You will find many safety precautions and recommendations throughout this section, and throughout this manual. The safety precautions in this section are among the most important.

Always Wear Your Seat Belt

A seat belt is your best protection in all types of accidents. Air bags are designed to supplement seat belts, not replace them. So even though your vehicle is equipped with air bags, ALWAYS make sure you and your passengers wear your seat belts, and wear them properly.

Restrain All Children

All children under age 13 should ride in your vehicle properly restrained in a rear seat, not the front seat. Infants and small children should be restrained in an appropriate child restraint. Larger children should use a booster seat with the lap/shoulder belt until they can use the seat belt properly without a booster seat.

Air Bag Hazards

While air bags can save lives, they can also cause serious or fatal injuries to occupants who sit too close to them, or who are not properly restrained. Infants, young children, and shorter adults are at the greatest risk of being injured by an inflating air bag. Follow all instructions and warnings in this manual.

Driver Distraction

Driver distraction presents a serious and potentially deadly danger, especially for inexperienced drivers. Safety should be the first concern when behind the wheel and drivers need to be aware of the wide array of potential distractions, such as drowsiness, reaching for objects, eating, personal grooming, other passengers, and using cellular phones.

Drivers can become distracted when they take their eyes and attention off the road or their hands off the wheel to focus on activities other than driving. To reduce your risk of distraction or getting into an accident:

- ALWAYS set up your mobile devices (i.e., MP3 players, phones, navigation units, etc.) when your vehicle is parked or safely stopped.
- ONLY use your mobile device when allowed by laws and when conditions permit safe use. NEVER text or email while driving. Most states have laws prohibiting drivers from texting. Some states and cities also prohibit drivers from using handheld phones.
- NEVER let the use of a mobile device distract you from driving. You have a responsibility to your passengers and others on the road to always drive safely, with your hands on the wheel as well as your eyes and attention on the road.

Control Your Speed

Excessive speed is a major factor in crash injuries and deaths. Generally, the higher the speed, the greater the risk, but serious injuries can also occur at lower speeds. Never drive faster than is safe for current conditions, regardless of the maximum speed posted.

Keep Your Vehicle in Safe Condition

Having a tire blowout or a mechanical failure can be extremely hazardous. To reduce the possibility of such problems, check your tire pressures and condition frequently, and perform all regularly scheduled maintenance.

SEATS

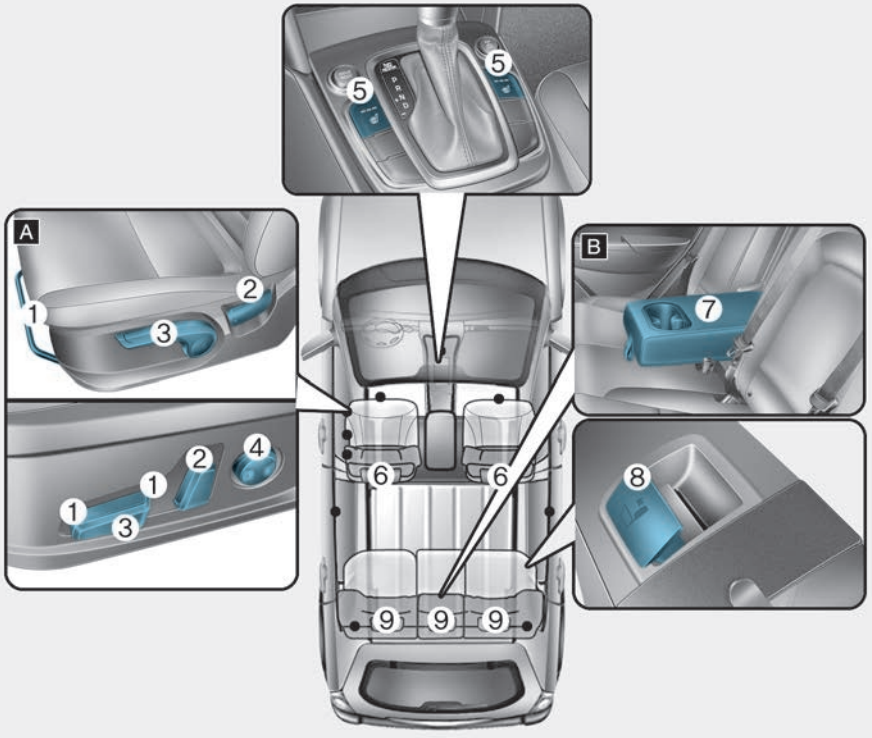

Front seats

(1) Forward and backward
(2) Seatback angle
(3) Seat cushion height
(4) Lumbar support (Driver's seat)*
(5) Seat warmer*/Air ventilation seat*
(6) Headrest

Rear seats

(7) Armrest*
(8) Seatback folding
(9) Headrest

* : if equipped

[A] : Driver's Side, [B] : Rear seat

OOS037073N

Safety Precautions

Adjusting the seats so that you are sitting in a safe, comfortable position plays an important role in driver and passenger safety together with the seat belts and air bags in an accident.

⚠ WARNING

Do not use a cushion that reduces friction between the seat and the passenger. The passenger's hips may slide under the lap portion of the seat belt during an accident or a sudden stop. Serious or fatal internal injuries could result because the seat belt cannot operate properly.

Air bags

You can take steps to reduce the risk of being injured by an inflating air bag. Sitting too close to an air bag greatly increases the risk of injury in the event the air bag inflates.

The National Highway Traffic Safety Administration (NHTSA) recommends that drivers allow at least 10 inches (25 cm) between the center of the steering wheel and their chest.

⚠ WARNING

To reduce the risk of serious injury or death from an inflating air bag, take the following precautions:

- **Adjust the driver's seat as far to the rear as possible while maintaining the ability to maintain full control of the vehicle.**
- **Adjust the front passenger seat as far to the rear as possible.**
- **Hold the steering wheel by the rim with hands at the 9 o'clock and 3 o'clock positions to minimize the risk of injuries to your hands and arms.**
- **NEVER place anything or anyone between the steering wheel and the air bag.**
- **Do not allow the front passenger to place feet or legs on the dashboard to minimize the risk of leg injuries.**

Seat belts

Always fasten your seat belt before starting any trip.

At all times, passengers should sit upright and be properly restrained. Infants and small children must be restrained in appropriate child restraint systems. Adults and children who have outgrown a booster seat must be restrained using the seat belts.

⚠ WARNING

Take the following precautions when adjusting your seat belt:

- **NEVER use one seat belt for more than one occupant.**
- **Always position the seatback upright with the lap portion of the seat belt snug and low across the hips.**
- **NEVER allow children or small infants to ride on a passenger's lap.**
- **Do not route the seat belt across your neck, across sharp edges, or reroute the shoulder strap away from your body.**
- **Do not allow the seat belt to become caught or jammed.**

Front Seats

⚠ WARNING

Take the following precautions when adjusting your seat:

- **NEVER attempt to adjust the seat while the vehicle is moving. The seat could respond with unexpected movement and may cause loss of vehicle control resulting in an accident.**
- **Do not place anything under the front seats. Loose objects in the driver's foot area could interfere with the operation of the foot pedals, causing an accident.**
- **Do not allow anything to interfere with the normal position and proper locking of the seatback.**
- **Do not place a cigarette lighter on the floor or seat. When you operate the seat, gas may exit out of the lighter causing a fire.**
- **Use extreme caution when picking up small objects trapped under the seats or between the seat and the center console. Your hands might be cut or injured by the sharp edges of the seat mechanism.**

⚠ CAUTION

To prevent injury:

- **Do not adjust your seat while wearing your seat belt. Moving the seat cushion forward may cause strong pressure on your abdomen.**
- **Do not allow your hands or fingers to get caught in the seat mechanisms while the seat is moving.**

Manual adjustment (if equipped)

The front seat can be adjusted by using the levers located on the outside of the seat cushion. Before driving, adjust the seat to the proper position so that you can easily control the steering wheel, foot pedals and controls on the instrument panel.

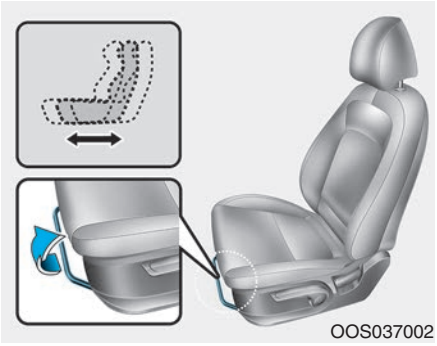

Forward and rearward adjustment

To move the seat forward or rearward:

1. Pull up the seat slide adjustment lever and hold it.
2. Slide the seat to the position you desire.
3. Release the lever and make sure the seat is locked in place. Move forward and rearward without using the lever. If the seat moves, it is not locked properly.

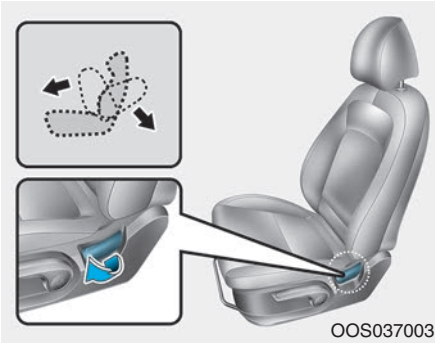

Seatback angle

To recline the seatback:

1. Lean forward slightly and lift up the seatback lever.
2. Carefully lean back on the seat and adjust the seatback to the position you desire.
3. Release the lever and make sure the seatback is locked in place. (The lever MUST return to its original position for the seatback to lock.)

Reclining seatback

Sitting in a reclined position when the vehicle is in motion can be dangerous. Even when buckled up, the protection of your restraint system (seat belts and air bags) is greatly reduced by reclining your seatback.

⚠ WARNING

NEVER ride with a reclined seatback when the vehicle is moving.

Riding with a reclined seatback increases your chance of serious or fatal injuries in the event of a collision or sudden stop.

Drivers and passengers should ALWAYS sit well back in their seats, properly belted, and with the seatbacks upright.

Seat belts must be snug against your hips and chest to work properly. When the seatback is reclined, the shoulder belt cannot do its job because it will not be snug against your chest. Instead, it will be in front of you. During an accident, you could be thrown into the seat belt, causing neck or other injuries.

The more the seatback is reclined, the greater chance the passenger's hips will slide under the lap belt or the passenger's neck will strike the shoulder belt.

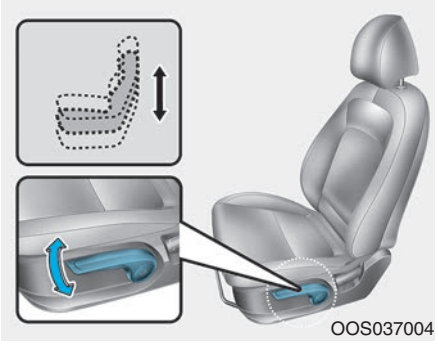

Seat cushion height

To change the height of the seat cushion:

- Push down on the lever several times, to lower the seat cushion.
- Pull up on the lever several times, to raise the seat cushion.

Power adjustment (for driver's seat, if equipped)

The front seat can be adjusted by using the control switches located on the outside of the seat cushion. Before driving, adjust the seat to the proper position so that you can easily control the steering wheel, foot pedals and controls on the instrument panel.

⚠ WARNING

NEVER allow children in the vehicle unattended. The power seats are operable when the vehicle is turned off.

NOTICE

To prevent damage to the seats:

- **Always stop adjusting the seats when the seat has moved as far forward or rearward as possible.**
- **Do not adjust the seats for longer than necessary when the vehicle is turned off. This may result in unnecessary battery drain.**
- **Do not operate two or more seats at the same time. This may result in an electrical malfunction.**

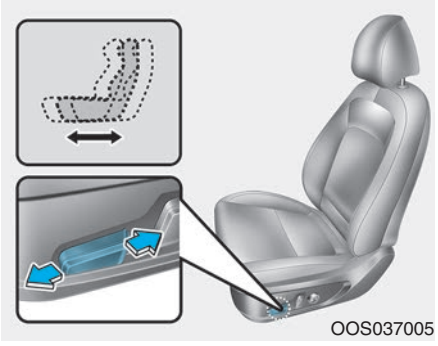

Forward and rearward adjustment

To move the seat forward or rearward:

1. Push the control switch forward or rearward.
2. Release the switch once the seat reaches the desired position.

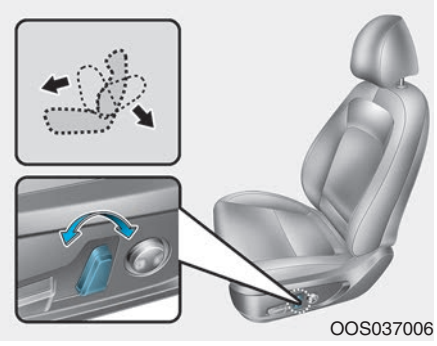

Seatback angle

To adjust the seatback:

1. Rotate the top of control switch forward or rearward.
2. Release the switch once the seatback reaches the desired position.

Reclining seatback

Sitting in a reclined position when the vehicle is in motion can be dangerous. Even when buckled up, the protection of your restraint system (seat belts and air bags) is greatly reduced by reclining your seatback.

⚠ WARNING

NEVER ride with a reclined seatback when the vehicle is moving.

Riding with a reclined seatback increases your chance of serious or fatal injuries in the event of a collision or sudden stop.

Driver and passengers should ALWAYS sit well back in their seats, properly belted, and with the seatbacks upright.

Seat belts must be snug against your hips and chest to work properly. When the seatback is reclined, the shoulder belt cannot do its job because it will not be snug against your chest. Instead, it will be in front of you. During an accident, you could be thrown into the seat belt, causing neck or other injuries.

The more the seatback is reclined, the greater chance the passenger's hips will slide under the lap belt or the passenger's neck will strike the shoulder belt.

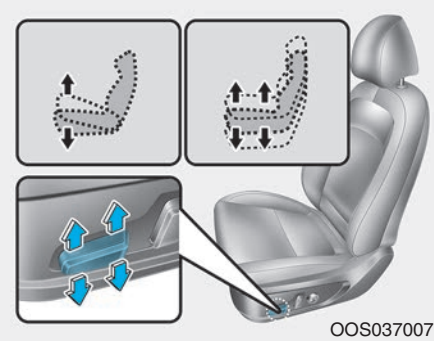

Seat cushion height

To change the height of the seat cushion:

1. • Push the front portion of the control switch up to raise or down to lower the front part of the seat cushion.
   • Push the rear portion of the control switch up to raise or down to lower the height of the seat cushion.
2. Release the switch once the seat reaches the desired position.

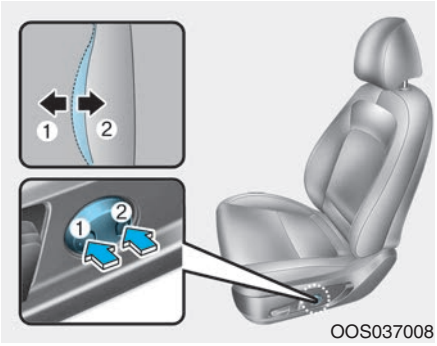

Lumbar support (if equipped)

To adjust the lumbar support:

1. Press the front portion of the switch (1) to increase support or the rear portion of the switch (2) to decrease support.
2. Release the switch once it reaches the desired position.

Seatback pocket (if equipped)

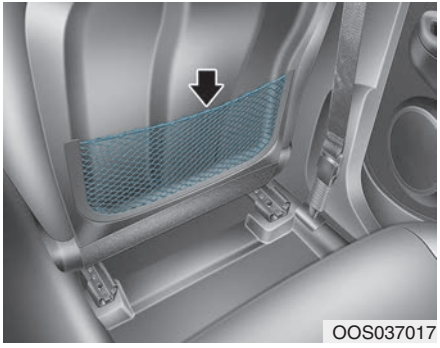

The seatback pocket is provided on the back of the front passenger's seatback.

⚠ WARNING

To prevent the Occupant Classification System from malfunctioning:

Do not hang onto the front passenger's seatback.

⚠ CAUTION

Do not put heavy or sharp objects in the seatback pockets. In an accident they could come loose from the pocket and injure occupants.

Rear Seats

Folding the rear seat

The rear seatbacks can be folded to facilitate carrying long items or to increase the luggage capacity of the vehicle.

⚠ WARNING

- **Never allow passengers to sit on top of the folded down seatback while the vehicle is moving. This is not a proper seating position and no seat belts are available for use. This could result in serious injury or death in case of an accident or sudden stop.**
- **Objects carried on the folded down seatback should not extend higher than the top of the front seatbacks. This could allow cargo to slide forward and cause injury or damage during sudden stops.**

To fold down the rear seatback:

1. Set the front seatback to the upright position and if necessary, slide the front seat forward.

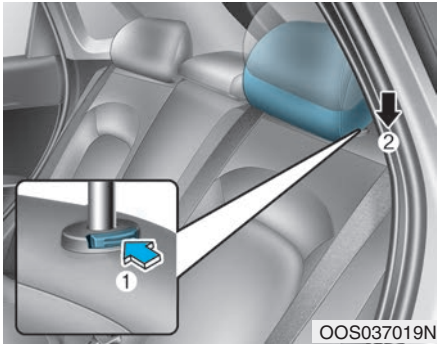

2. Lower the rear head restraints to the lowest position by pushing and holding the release button (1) and pushing down on the headrest (2).

OOS037020N

3. Move the seatbelt toward the outboard position before folding down the seatback to avoid the seatbelt system interfering with the seatback.

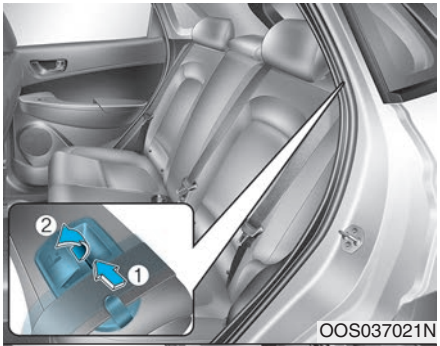

OOS037021N

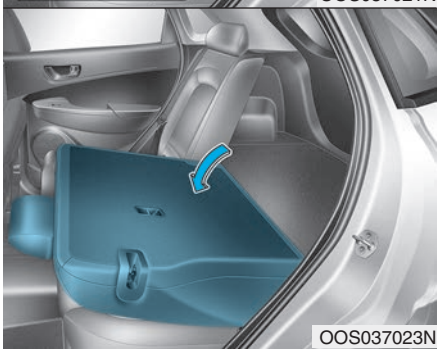
OOS037023N

4. Put out the belt from guide (1) and pull up the seatback folding lever (2), then fold the seat toward the front of the vehicle.

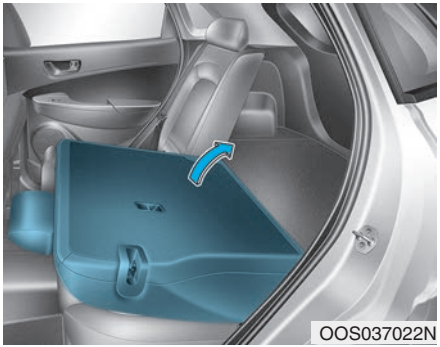
OOS037022N

5. To use the rear seat, lift and unfold the seatback to the upright position. Push the seatback firmly until it clicks into place. Make sure the seatback is locked in place.

   Be careful when returning the rear seatback to prevent damage to the seatbelt. Insert the belt in the guide

⚠ WARNING

When returning the rear seatback from a folded to an upright position, hold the seatback and return it slowly. Ensure that the seatback is completely locked into its upright position by pushing on the top of the seatback. In an accident or sudden stop, the unlocked seatback could allow cargo to move forward with great force and enter the passenger compartment, which could result in serious injury or death.

⚠ WARNING

Do not place objects in the rear seats, since they cannot be properly secured and may hit vehicle occupants in a collision causing serious injury or death.

⚠ WARNING

Make sure the vehicle is off, the shift lever is in P (Park), and the parking brake is securely applied whenever loading or unloading cargo. Failure to take these steps may allow the vehicle to move if the shift lever is inadvertently moved to another position.

⚠ CAUTION

- **Be careful when loading cargo through the rear passenger seats to prevent damage to the vehicle interior.**
- **When cargo is loaded through the rear passenger seats, ensure the cargo is properly secured to prevent it from moving while driving.**
- **Unsecured cargo in the passenger compartment can cause damage to the vehicle or injury to it's occupants.**

Armrest (if equipped)

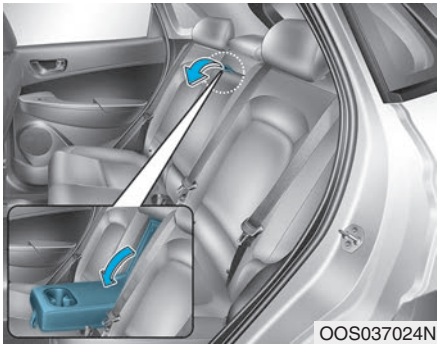

The armrest is located in the center of the rear seat. Use the strap in the center of the armrest to pull it down.

Head Restraints

The vehicle's front and rear seats have adjustable head restraints. The head restraints provide comfort for passengers, but more importantly they are designed to help protect passengers from whiplash and other neck and spinal injuries during an accident, especially in a rear impact collision.

⚠ WARNING

To reduce the risk of serious injury or death in an accident, take the following precautions when adjusting your head restraints:

- **Always properly adjust the head restraints for all passengers BEFORE starting the vehicle.**
- **NEVER let anyone ride in a seat with the head restraints removed.**

- 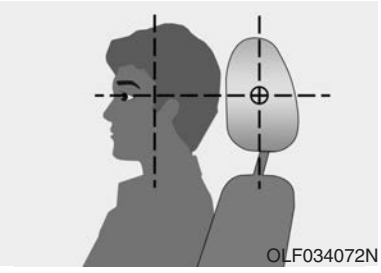

  Adjust the head restraints so the middle of the head restraint is at the same height as the height of the top of the eyes.
- **NEVER adjust the head restraint position of the driver's seat when the vehicle is in motion.**
- **Adjust the head restraint as close to the passenger's head as possible. Do not use a seat cushion that holds the body away from the seatback.**
- **Make sure the head restraint locks into position after adjusting it.**

NOTICE

To prevent damage, NEVER hit or pull on the head restraints.

⚠ CAUTION

When there is no occupant in the rear seats, adjust the height of the headrest to the lowest position. The rear seat headrest can reduce the visibility of the rear area.

Front seat head restraints

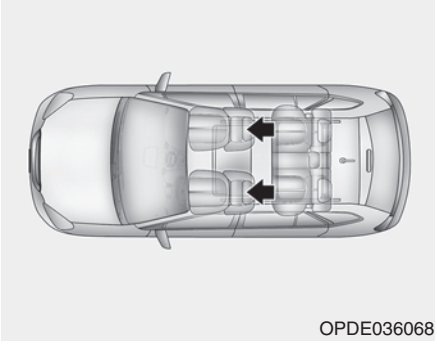

The vehicle's front and passenger's seats are equipped with adjustable head restraints for the passengers safety and comfort.

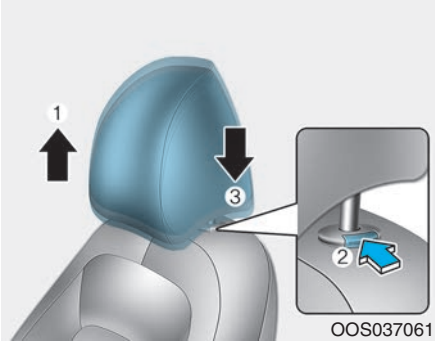

Adjusting the height up and down

To raise the head restraint:

1. Pull it up to the desired position (1).

To lower the head restraint:

1. Push and hold the release button (2) on the head restraint support.
2. Lower the head restraint to the desired position (3).

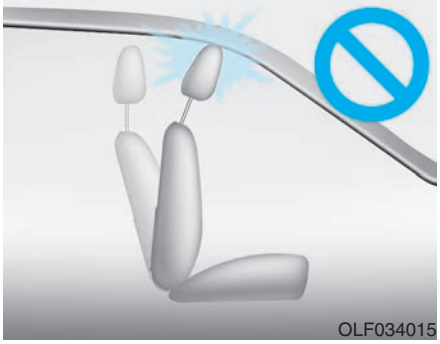

NOTICE

If you recline the seatback towards the front with the head restraint and seat cushion raised, the head restraint may come in contact with the sunvisor or other parts of the vehicle.

■ Type A

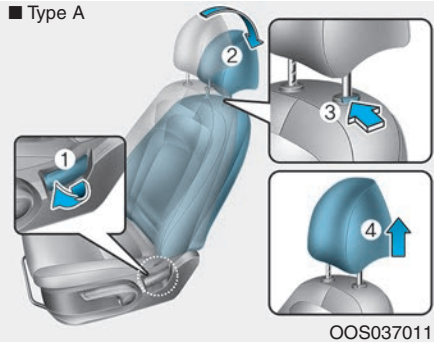

OOS037011

■ Type B

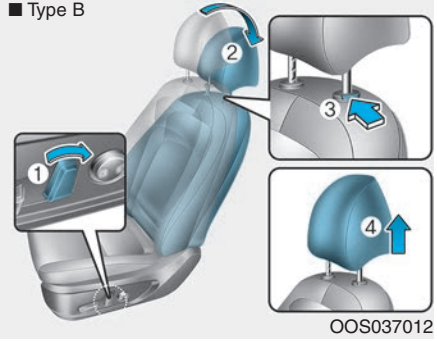

OOS037012

Removal/Reinstallation

To remove the head restraint:

1. Recline the seatback (2) rearward using the seatback angle lever/ switch (1).
2. Raise the head restraint as far as it can go.
3. Press the head restraint release button (3) while pulling the head restraint up (4).

■ Type A

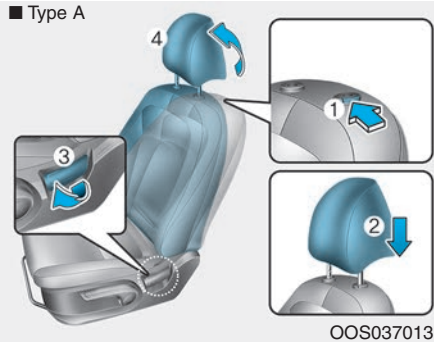

OOS037013

■ Type B

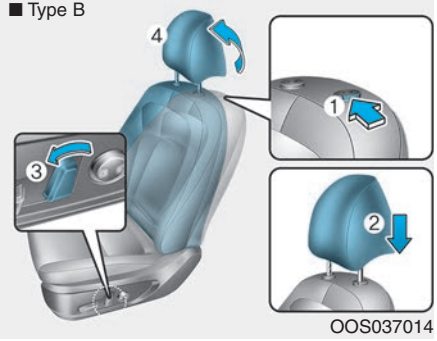

OOS037014

To reinstall the head restraint:

1. Put the head restraint poles (2) into the holes while pressing the release button (1).

2. Adjust the head restraint to the appropriate height.
3. Adjust the seatback (4) forward using the seatback angle lever/ switch (3).

Rear seat head restraints

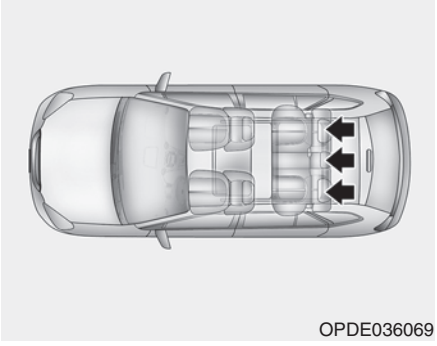
OPDE036069

The rear seats are equipped with head restraints in all the seating positions for the passenger's safety and comfort.

⚠ CAUTION

- **Adjust the headrests so the middle of the head restraints is at the same height as the height of the top of the eyes.**

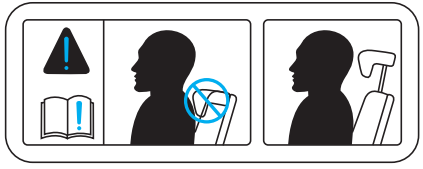

- **When seating on the rear seat, do not adjust the height of the head restraints to the lowest.**

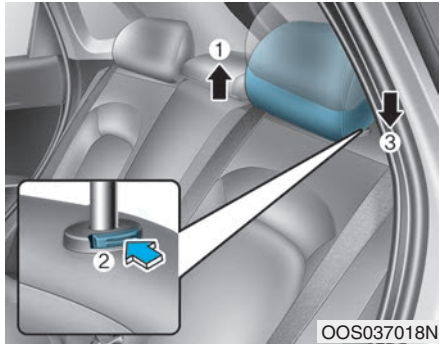

OOS037018N

Adjusting the height up and down

To raise the head restraint:

1. Pull it up to the desired position (1).

To lower the head restraint:

1. Push and hold the release button (2) on the head restraint support.
2. Lower the head restraint to the desired position (3).

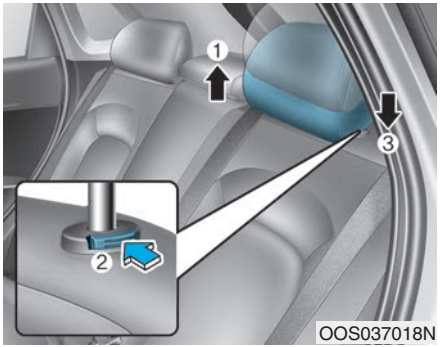

Removal/Reinstallation

To remove the head restraint:

1. Raise the head restraint as far as it can go.
2. Press the head restraint release button (2) while pulling the head restraint up (1).

To reinstall the head restraint:

1. Put the head restraint poles into the holes (3) while pressing the release button (2).
2. Adjust the head restraint to the appropriate height.

Seat Warmers and Air Ventilation Seats

Front seat warmers (if equipped)

Seat warmers are provided to warm the seats during cold weather.

⚠ WARNING

The seat warmers can cause a SERIOUS BURN, even at low temperatures and especially if used for long periods of time.

Passengers must be able to feel if the seat is becoming too warm so they can turn it off, if needed.

People who cannot detect temperature change or pain to the skin should use extreme caution, especially the following types of passengers:

- **Infants, children, elderly or disabled persons, or hospital outpatients.**
- **People with sensitive skin or who burn easily.**
- **Fatigued individuals.**
- **Intoxicated individuals.**
- **People taking medication that can cause drowsiness or sleepiness.**

⚠ WARNING

NEVER place anything on the seat that insulates against heat when the seat warmer is in operation, such as a blanket or seat cushion. This may cause the seat warmer to overheat, causing a burn or damage to the seat.

NOTICE

To prevent damage to the seat warmers and seats:

- **Never use a solvent such as paint thinner, benzene, alcohol or gasoline to clean the seats.**
- **Do not place heavy or sharp objects on seats equipped with seat warmers.**
- **Do not change the seat cover. It may damage the seat warmer.**

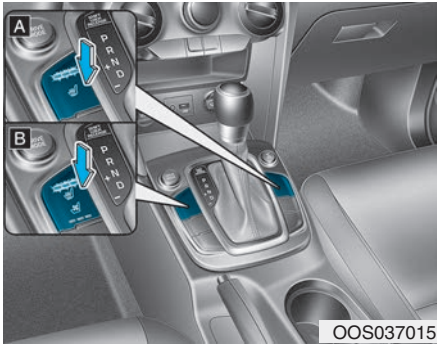

[A] : Type A, [B] : Type B

While the engine is running, push either of the switches to warm the driver's seat or front passenger's seat.

During mild weather or under conditions where the operation of the seat warmer is not needed, keep the switches in the OFF position.

- Each time you push the switch, the temperature setting of the seat is changed as follows :

OFF → HIGH
↑ ↓
LOW ← MIDDLE

- When pressing the switch for more than 1.5 seconds with the seat warmer operating, the seat warmer will turn OFF.
- The seat warmer defaults to the OFF position each time the ignition switch is turned to the ON position.

Information

With the seat warmer switch in the ON position, the heating system in the seat turns off or on automatically depending on the seat temperature.

Front air ventilation seat (if equipped)

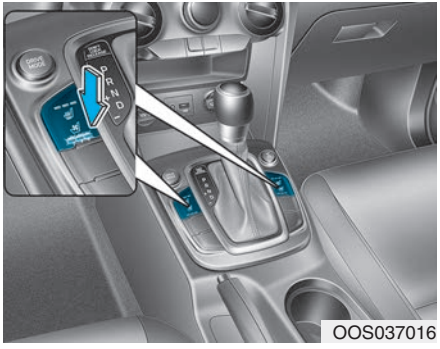

The air ventilation seats are provided to cool the front seats by blowing air through small vent holes on the surface of the seat cushions and seatbacks.

When the operation of the air ventilation seat is not needed, keep the switches in the OFF position.

While the engine is running, push the switch to cool the driver's seat or the front passenger's seat.

- Each time you push the switch, the airflow changes as follows:

OFF → HIGH ( )
↑ ↓
LOW ( ) ← MIDDLE ( )

- When pressing the switch for more than 1.5 seconds with the air ventilation seat operating, the operation will turn OFF.
- The air ventilation seats defaults to the OFF position each time the ignition switch is turned to the ON position.

NOTICE

To prevent damage to the air ventilation seat:

- **Use the air ventilation seat ONLY when the climate control system is on. Using the air ventilation seat for prolonged periods of time with the climate control system off could cause the air ventilation seat to malfunction.**
- **Never use a solvent such as paint thinner, benzene, alcohol or gasoline to clean the seats.**
- **Avoid spilling liquids on the surface of the front seats and seatbacks; this may cause the air vent holes to become blocked and not work properly.**
- **Do not place materials such as plastic bags or newspapers under the seats. They may block the air intake causing the air vents to not work properly.**
- **Do not change the seat covers. It may damage the air ventilation seat.**
- **If the air vents do not operate, restart the vehicle. If there is no change, have the vehicle inspected by an authorized HYUNDAI dealer.**

SEAT BELTS

This section describes how to use the seat belts properly. It also describes some of the things to avoid when using seat belts.

Seat Belt Safety Precautions

Always fasten your seat belt and make sure all passengers have fastened their seat belts before starting any trip. Air bags are designed to supplement the seat belt as an additional safety device, but they are not a substitute. Most states require all occupants of a vehicle to wear seat belts.

⚠ WARNING

Seat belts must be used by ALL passengers whenever the vehicle is moving. Take the following precautions when adjusting and wearing seat belts:

- **ALWAYS properly restrain children under age 13 in the rear seats.**
- **NEVER allow children to ride in the front passenger seat. If a child age 13 or older must be seated in the front seat, move the seat as far back as possible and properly restrain them in the seat.**
- **NEVER allow an infant or child to be carried on an occupant's lap.**
- **NEVER ride with the seatback reclined when the vehicle is moving.**
- **Do not allow children to share a seat or seat belt.**
- **Do not wear the shoulder belt under your arm or behind your back.**
- **Always wear both the shoulder portion and lap portion of the lap/shoulder belt.**
- **Do not use the seat belt if it is twisted. A twisted seat belt will not protect you properly in an accident.**
- **Do not use a seat belt if the webbing or hardware is damaged.**
- **Do not latch the seat belt into the buckles of other seats.**
- **NEVER unfasten the seat belt while driving. This may cause loss of vehicle control resulting in an accident.**
- **Make sure there is nothing in the buckle interfering with the seat belt latch mechanism. This may prevent the seat belt from fastening securely.**
- **No modifications or additions should be made by the user which will either prevent the seat belt adjusting devices from operating to remove slack, or prevent the seat belt assembly from being adjusted to remove slack.**

⚠ WARNING

Damaged seat belts and seat belt assemblies will not operate properly. Always replace:

- **Frayed, contaminated, or damaged webbing**
- **Damaged hardware**
- **The entire seat belt assembly after it has been worn in an accident, even if damage to webbing or assembly is not apparent**

Seat Belt Warning Light

Seat belt warning light (for driver's seat)

As a reminder to the driver, the seat belt warning light will illuminate for approximately 6 seconds each time you place the ignition switch to the ON position regardless of belt fastening. However, if the seat belt is unfasted, a warning chime will sound for approximately 6 seconds.

If you continue not to fasten the seat belt and you drive over 6 mph (9 km/h), the warning light will stay illuminated.

If you continue not to fasten the seat belt and you drive over 12 mph (20 km/h) the seat belt warning chime will sound for approximately 100 seconds and the corresponding warning light will blink.

If you unfasten the seat belt while driving under 12 mph (20 km/h), the seat belt warning light will illuminate until the seat belt is fastened.

If you unfasten the seat belt while driving over 12 mph (20 km/h), the seat belt warning chime will sound for approximately 100 seconds and the corresponding warning light will blink.

Seat belt warning light (for front passenger's seat)

■ For USA

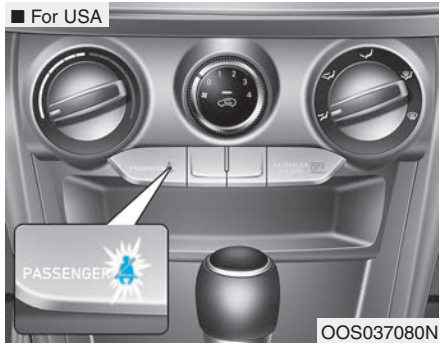

OOS037080N

■ For Canada

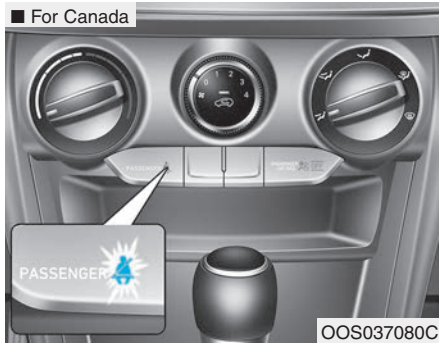

OOS037080C

As a reminder to the front passenger, the front passenger's seat belt warning lights will illuminate for approximately 6 seconds each time you place the ignition switch to the ON position regardless of belt fastening.

If you continue not to fasten the seat belt and you drive over 6 mph (9 km/h), the warning light will stay illuminated.

If you continue not to fasten the seat belt and you drive over 12 mph (20 km/h) the seat belt warning chime will sound for approximately 100 seconds and the corresponding warning light will blink.

If you unfasten the seat belt while driving under 12 mph (20 km/h) the seat belt warning light will illuminate until the seat belt is fastened.

If you unfasten the seat belt while driving over 12 mph (20 km/h), the seat belt warning chime will sound for approximately 100 seconds and the corresponding warning light will blink.

⚠ WARNING

The front passenger's seat belt warning light may not properly operate if the front passenger does not sit properly in the seat.

Seat Belt Restraint System

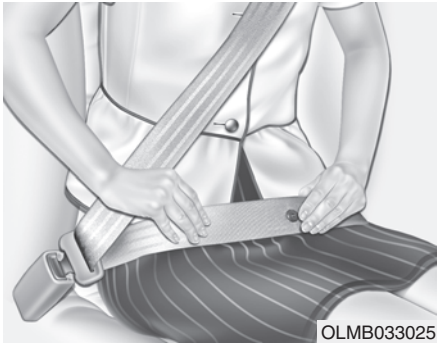

⚠ WARNING

Improperly positioned seat belts may increase the risk of serious injury in an accident. Take the following precautions when adjusting the seat belt:

- **Position the lap portion of the seat belt as low as possible across your hips, not on your waist, so that it fits snugly.**
- **Position one arm under the shoulder belt and the other over the belt, as shown in the illustration.**
- **Always position the shoulder belt anchor into the locked position at the appropriate height.**
- **Never position the shoulder belt across your neck or face.**

Seat Belt-Driver's 3-point system with emergency locking retractor

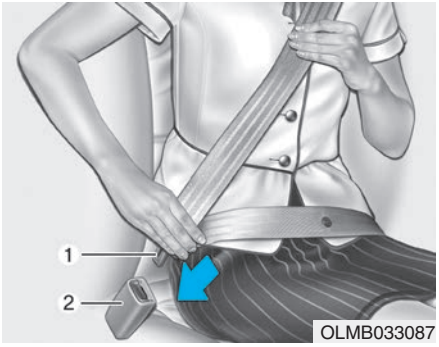

To fasten your seat belt:

Pull the seat belt out of the retractor and insert the metal tab (1) into the buckle (2). There will be an audible "click" when the tab locks into the buckle.

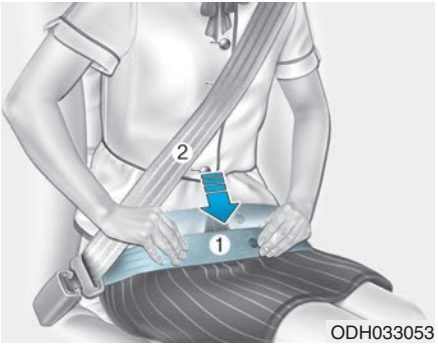

You should place the lap belt (1) portion across your hips and the shoulder belt (2) portion across your chest.

The seat belt automatically adjusts to the proper length after the lap belt portion is adjusted manually so that it fits snugly around your hips. If you lean forward in a slow, easy motion, the belt will extend and move with you.

If there is a sudden stop or impact, the belt will lock into position. It will also lock if you try to lean forward too quickly.

NOTICE

If you are not able to smoothly pull enough of the seat belt out from the retractor, firmly pull the seat belt out and release it. After release, you will be able to pull the belt out smoothly.

Height adjustment

You can adjust the height of the shoulder belt anchor to one of the three different positions for maximum comfort and safety.

The shoulder portion should be adjusted so it lies across your chest and midway over your shoulder nearest the door, not over your neck.

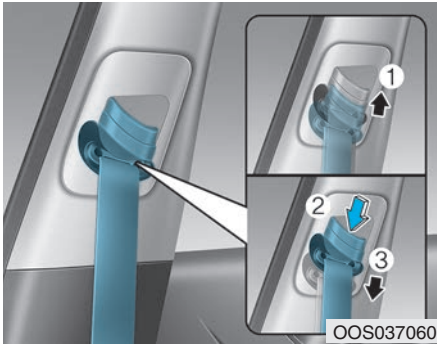

To adjust the height of the seat belt anchor, lower or raise the height adjuster into an appropriate position.

To raise the height adjuster, pull it up (1). To lower it, push it down (3) while pressing the height adjuster button (2).

Release the button to lock the anchor into position. Try sliding the height adjuster to make sure that it has locked into position.

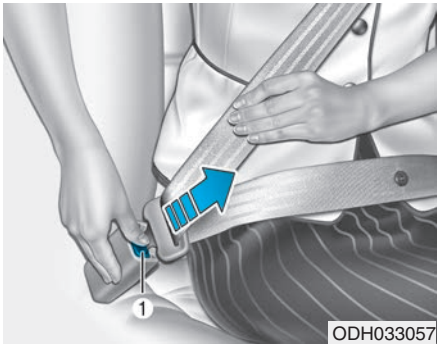

To release your seat belt:

Press the release button (1) in the locking buckle.

When it is released, the belt should automatically draw back into the retractor. If this does not happen, check the belt to be sure it is not twisted, then try again.

Rear Seat Belt – Passenger's 3-point system with convertible locking retractor

This type of seat belt combines the features of both an emergency locking retractor seat belt and an automatic locking retractor seat belt. Convertible retractor type seat belts are installed in the rear seat positions to help accommodate the installation of child restraint systems. Although a convertible retractor is also installed in the front passenger seat position, NEVER place any infant/child restraint system in the front seat of the vehicle.

To fasten your seat belt:

Pull the seat belt out of the retractor and insert the metal tab into the buckle. There will be an audible "click" when the tab locks into the buckle. When not securing a child restraint, the seat belt operates in the same way as the driver's seat belt (Emergency Locking Retractor Type). It automatically adjusts to the proper length only after the lap belt portion of the seat belt is adjusted manually so that it fits snugly across your hips.

When the seat belt is fully extended from the retractor to allow the installation of a child restraint system, the seat belt operation changes to allow the belt to retract, but not to extend (Automatic Locking Retractor Type). Refer to the "Using a Child Restraint System" section in this chapter.

NOTICE

Although the seat belt retractor provides the same level of protection for seated passengers in either emergency or automatic locking modes, the emergency locking mode allows seated passengers to move freely in their seat while keeping some tension on the belt. During a collision or sudden stop, the retractor automatically locks the belt to help restrain your body.

To deactivate the automatic locking mode, unbuckle the seat belt and allow the belt to fully retract.

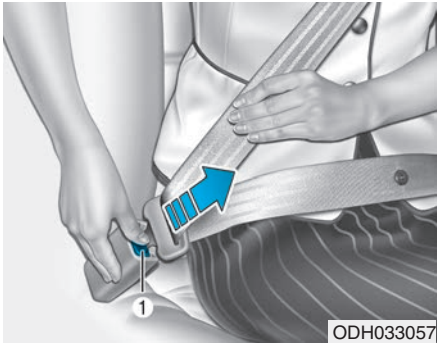

To release your seat belt:

Press the release button (1) in the locking buckle.

When it is released, the belt should automatically draw back into the retractor. If this does not happen, check the belt to be sure it is not twisted, then try again.

Rear center seat belt

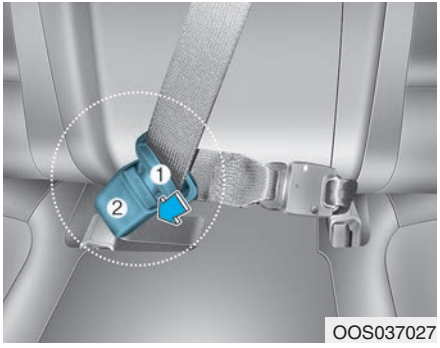

When using the rear center seat belt, the buckle with the "CENTER" mark must be used.

Pre-tensioner seat belt (Driver and front passenger)

Your vehicle is equipped with driver's and front passenger's Pre-tensioner Seat Belts (Retractor Pretensioner and Emergency Fastening Device System). The purpose of the pre-tensioner is to make sure the seat belts fit tightly against the occupant's body in certain frontal or side collision(s). The Emergency Fastening Device System may be activated in certain crashes where the frontal collision(s) is severe enough, together with the air bags.

When the vehicle stops suddenly, or if the occupant tries to lean forward too quickly, the seat belt retractor will lock into position. In certain frontal or side collision(s), the pre-tensioner will activate and pull the seat belt into tighter contact against the occupant's body.

(1) Retractor Pretensioner

The purpose of the retractor pretensioner is to make sure that the shoulder belts fit in tightly against the occupant's upper body in certain frontal or side collision(s).

(2) Emergency Fastening Device System

The purpose of the Emergency Fastening Device System is to make sure that the pelvis belts fit in tightly against the occupant's lower body in certain frontal collision(s).

If the system senses excessive tension on the driver or passenger's seat belt when the pre-tensioner system activates, the load limiter inside the retractor pre-tensioner will release some of the pressure on the affected seat belt.

⚠ WARNING

- **Always wear your seat belt and sit properly in your seat.**
- **Do not use the seat belt if it is loose or twisted. A loose or twisted seat belt will not protect you properly in an accident.**
- **Do not place anything near the buckle. This may adversely affect the buckle and cause it to function improperly.**
- **Always replace your pre-tensioners after activation or an accident.**
- **NEVER inspect, service, repair or replace the pre-tensioners yourself. This must be done by an authorized HYUNDAI dealer.**
- **Do not hit the seat belt assemblies.**

⚠ WARNING

Do not touch the pre-tensioner seat belt assemblies for several minutes after they have been activated. When the pre-tensioner seat belt mechanism deploys during a collision, the pre-tensioners become hot and can burn you.

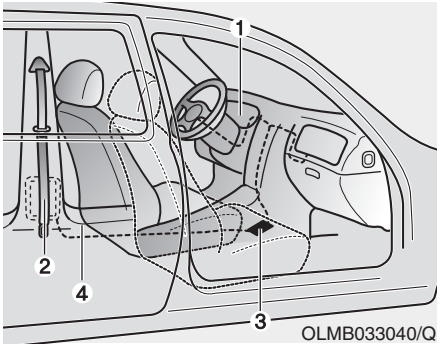

OLMB033040/Q

The Pre-Tensioner Seat Belt System consists mainly of the following components. Their locations are shown in the illustration above:

1. SRS air bag warning light
2. Retractor pre-tensioner
3. SRS control module
4. Emergency Fastening Device System

NOTICE

The sensor that activates the SRS air bag is connected with the pre–tensioner seat belts. The SRS air bag warning light on the instrument panel will illuminate for approximately 6 seconds after the ignition switch is in the ON position, and then it should turn off.

If the pre-tensioner is not working properly, the warning light will illuminate even if the SRS air bag is not malfunctioning. If the warning light does not illuminate, stays illuminated or illuminates when the vehicle is being driven, have an authorized HYUNDAI dealer inspect the pre-tensioner seat belts and SRS air bags as soon as possible.

NOTICE

- **Both the driver's and front passenger's pre-tensioner seat belts may be activated in certain frontal or side collisions or rollovers.**
- **When the pre-tensioner seat belts are activated, a loud noise may be heard and fine dust, which may appear to be smoke, may be visible in the passenger compartment. These are normal operating conditions and are not hazardous.**
- **Although it is non-toxic, the fine dust may cause skin irritation and should not be inhaled for prolonged periods. Wash all exposed skin areas thoroughly after an accident in which the pre-tensioner seat belts were activated.**

⚠ WARNING

- **Fasten your seat belt while sitting properly in an upright position to maximize the effectiveness of the pre-tensioner seat belt system.**
- **A pre-tensioner seat belt system is designed to activate only once. Replace the pre-tensioner seat belt system, if it was activated in an accident.**

Additional Seat Belt Safety Precautions

Seat belt use during pregnancy

The seat belt should always be used during pregnancy. The best way to protect your unborn child is to protect yourself by always wearing the seat belt.

Pregnant women should always wear a lap-shoulder seat belt. Place the shoulder belt across your chest, routed between your breasts and away from your neck. Place the lap belt line so that it fits snugly and as low as possible across the hips, not across the abdomen.

⚠ WARNING

- **A pregnant woman or a patient is more vulnerable to any imapcts on the abdomen during an abrupt stop or accident. If you are in an accident while pregnant, we recommend you consult your doctor.**
- **To reduce the risk of serious injury or death to an unborn child during an accident, pregnant women should NEVER place the lap portion of the seat belt above or over the area of the abdomen where the unborn child is located.**

Seat belt use and children

Infant and small children

All 50 states have child restraint laws which require children to travel in approved child restraint devices, including booster seats. The age at which seat belts can be used instead of child restraints differs among states, so you should be aware of the specific requirements in your state, and where you are travelling. Infant and child restraints must be properly placed and installed in a rear seat. For more information refer to the "Child Restraint Systems" section in this chapter.

⚠ WARNING

ALWAYS properly restrain infants and small children in a child restraint appropriate for the child's height and weight.

To reduce the risk of serious injury or death to a child and other passengers, NEVER hold a child in your lap or arms when the vehicle is moving. The violent forces created during an accident will tear the child from your arms and throw the child against the interior of the vehicle.

Small children are best protected from injury in an accident when properly restrained in the rear seat by a child restraint system that meets the requirements of the Federal Motor Vehicle Safety Standards. Before buying any child restraint system, make sure that it has a label certifying that it meets Federal Motor Vehicle Safety Standard FMVSS 213. The restraint must be appropriate for your child's height and weight. Check the label on the child restraint for this information. Refer to the "Child Restraint Systems" section in this chapter.

Larger children

Children under age 13 and who are too large for a booster seat must always occupy the rear seat and use the available lap/shoulder belts. A seat belt should lie across the upper thighs and be snug across the shoulder and chest to restrain the child safely. Check belt fit periodically. Children are afforded the most safety in the event of an accident when they are restrained by a proper restraint system and/or seat belts in the rear seat. Always have the LATCH system inspected by your authorized HYUNDAI dealer after an accident. An accident can damage the LATCH system and may not properly secure the child restraint.

If a larger child over age 13 must be seated in the front seat, the child must be securely restrained by the available lap/shoulder belt and the seat should be placed in the rearmost position.

If the shoulder belt portion slightly touches the child's neck or face, try placing the child closer to the center of the vehicle. If the shoulder belt still touches their face or neck they need to be returned to an appropriate booster seat in the rear seat.

⚠ WARNING

- **Always make sure children are wearing their seat belts and that they are properly adjusted before driving.**
- **NEVER allow the shoulder belt to contact the child's neck or face.**
- **Do not allow more than one child to use a single seat belt.**

Transporting an injured person

A seat belt should be used when an injured person is being transported. Consult a physician for specific recommendations.

One person per belt

Two people (including children) should never attempt to use a single seat belt. This could increase the severity of injuries in case of an accident.

Do not lie down

Sitting in a reclined position when the vehicle is in motion can be dangerous. Even when buckled up, the protections of your restraint system (seat belts and air bags) is greatly reduced by reclining your seatback.

To reduce the chance of injuries in the event of an accident and to achieve the maximum effectiveness of the restraint system, all passengers should be sitting up and the front and rear seats should be in an upright position when the car is moving.

A seat belt cannot provide proper protection if the person is lying down in the rear seat or if the front or rear seats are in a reclined position.

⚠ WARNING

- **NEVER ride with a reclined seatback when the vehicle is moving.**
- **Riding with a reclined seatback increases your chance of serious or fatal injuries in the event of a collision or sudden stop.**
- **Drivers and passengers should always sit well back in their seats, properly belted, and with the seatbacks upright.**

Care of Seat Belts

Seat belt systems should never be disassembled or modified. In addition, care should be taken to assure that seat belts and belt hardware are not damaged by seat hinges, doors or other abuse.

Periodic inspection

All seat belts should be inspected periodically for wear or damage of any kind. Any damaged parts should be replaced as soon as possible by an authorized HYUNDAI dealer.

Keep belts clean and dry

Seat belts should be kept clean and dry. If belts become dirty, they can be cleaned by using a mild soap solution and warm water. Bleach, dye, strong detergents or abrasives should not be used because they may damage and weaken the fabric.

When to replace seat belts

The entire seat belt assembly or assemblies should be replaced if the vehicle has been involved in an accident. This should be done even if no damage is visible. Additional questions concerning seat belt operation should be directed to an authorized HYUNDAI dealer.

CHILD RESTRAINT SYSTEM (CRS)

Children Always in the Rear

⚠ WARNING

Always properly restrain children in the rear seats of the vehicle.

Children of all ages are safer when restrained in the rear seat. A child riding in the front passenger seat can be forcefully struck by an inflating air bag resulting in SERIOUS INJURY or DEATH.

Children under age 13 must always ride in the rear seats and must always be properly restrained to minimize the risk of injury in an accident, sudden stop or sudden maneuver. According to accident statistics, children are safer when properly restrained in the rear seats than in the front seat. **Even with air bags, children can be seriously injured or killed.** Children too large for a child restraint must use the seat belts provided.

All 50 states have child restraint laws which require children to travel in approved child restraint devices. The laws governing the age or height/weight restrictions at which seat belts can be used instead of child restraints differs among states, so you should be aware of the specific requirements in your state, and where you are travelling.

Child restraint systems must be properly placed and installed in the rear seat. You must use a commercially available child restraint system that meets the requirements of the Federal Motor Vehicle Safety Standards (FMVSS 213).

Child restraint systems are generally designed to be secured in a vehicle seat by lap belt portion of a lap/shoulder belt, or by a LATCH system in the rear seats of the vehicle.

Child restraint system (CRS)

Infants and younger children must be restrained in an appropriate rear-facing or forward-facing CRS that has first been properly secured to the rear seat of the vehicle. Read and comply with the instructions for installation and use provided by the manufacturer of the child restraint.

⚠ WARNING

An improperly secured child restraint can increase the risk of SERIOUS INJURY or DEATH in an accident. Always take the following precautions when using a child restraint system:

- **NEVER install a child or infant restraint in the front passenger's seat.**
- **Always properly secure the child restraint to a rear seat of the vehicle.**
- **Always follow the child restraint system manufacturer's instructions for installation and use.**
- **Always properly restrain your child in the child restraint.**
- **If the vehicle head restraint prevents proper installation of a child seat (as described in the child restraint system manual), the head restraint of the respective seating position shall be readjusted or entirely removed.**
- **Do not use an infant carrier or a child safety seat that "hooks" over a seatback, it may not provide adequate protection in an accident.**
- **After an accident, have a HYUNDAI dealer check the child restraint system, seat belts, tether anchors and lower anchors.**

Selecting a Child Restraint System (CRS)

When selecting a CRS for your child, always:

- Make sure the CRS has a label certifying that it meets applicable Federal Motor Vehicle Safety Standards (FMVSS 213).
- Select a child restraint based on your child's height and weight. The required label or the instructions for use typically provide this information.
- Select a child restraint that fits the vehicle seating position where it will be used.
- Read and comply with the warnings and instructions for installation and use provided with the child restraint system.

Child restraint system types

There are three main types of child restraint systems: rear-facing seats, forward-facing seats, and booster seats. They are classified according to the child's age, height and weight.

Rear-facing child seats

⚠ WARNING

NEVER install a child or infant restraint in the front passenger's seat.

Placing a rear-facing child restraint in the front seat can result in SERIOUS INJURY or DEATH if the child restraint is struck by an inflating air bag.

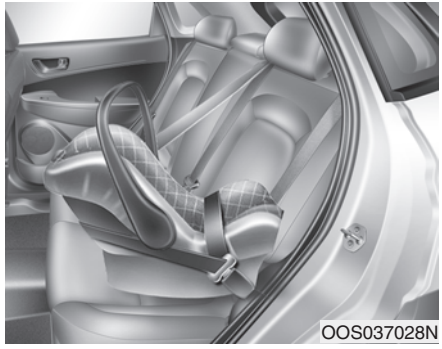

A rear-facing child seat provides restraint with the seating surface against the back of the child. The harness system holds the child in place, and in an accident, acts to keep the child positioned in the seat and reduce the stress to the neck and spinal cord.

All children under age one must always ride in a rear-facing infant child restraint.

Convertible and 3-in-1 child seats typically have higher height and weight limits for the rear-facing position, allowing you to keep your child rear-facing for a longer period of time.

Continue to use a rear-facing child seat for as long as your child will fit within the height and weight limits allowed by the child seat manufacturer. It's the best way to keep them safe. Once your child has outgrown the rear-facing child restraint, your child is ready for a forward-facing child restraint with a harness.

Forward-facing child restraints

A forward-facing child seat provides restraint for the child's body with a harness. Keep children in a forward-facing child seat with a harness until they reach the top height or weight limit allowed by your child restraint's manufacturer.

Once your child outgrows the forward-facing child restraint, your child is ready for a booster seat.

Booster seats

A booster seat is a restraint designed to improve the fit of the vehicle's seat belt system. A booster seat positions the seat belt so that it fits properly over the lap of your child.

Keep your child in a booster seat until they are big enough to sit in the seat without a booster and still have the seat belt fit properly. For a seat belt to fit properly, the lap belt must lie snugly across the upper thighs, not the stomach. The shoulder belt should lie snug across the shoulder and chest and not across the neck or face. Children under age 13 must always ride in the rear seats and must always be properly restrained to minimize the risk of injury.

Installing a Child Restraint System (CRS)

⚠ WARNING

Before installing your child restraint system always:

- **Read and follow the instructions provided by the manufacturer of the child restraint.**
- **Read and follow the instructions regarding child restraint systems in this manual.**

Failure to follow all warnings and instructions could increase the risk of the SERIOUS INJURY or DEATH if an accident occurs.

⚠ WARNING

If the vehicle headrest prevents proper installation of a child seat (as described in the child seat system manual, the headrest of the respective seating position shall be readjusted or entirely removed.

After selecting a proper child seat for your child, check to make sure it fits properly in your vehicle. Follow the instructions provided by the manufacturer when installing the child seat. Note these general steps when installing the seat to your vehicle:

- **Properly secure the child restraint to the vehicle.** All child restraints must be secured to the vehicle with the lap part of a lap/shoulder belt or with the LATCH system. If using the lap/shoulder belt for your child restraint, the convertible locking retractor should be pulled all the way out to engage the "automatic locking" mode. (See page 2-42.)
- **Make sure the child restraint is firmly secured.** After installing a child restraint to the vehicle, push and pull the seat forward-and-back and side-to-side to verify that it is securely attached to the seat. A child restraint secured with a seat belt should be installed as firmly as possible. However, some side-to-side movement can be expected.
- **Secure the child in the child restraint.** Make sure the child is properly strapped in the child restraint according to the manufacturer instructions.

⚠ CAUTION

A child restraint in a closed vehicle can become very hot. To prevent burns, check the seating surface and buckles before placing your child in the child restraint.

Lower Anchors and Tether for Children (LATCH System)

The LATCH system holds a child restraint during driving and in an accident. This system is designed to make installation of the child restraint easier and reduce the possibility of improperly installing your child restraint. The LATCH system uses anchors in the vehicle and attachments on the child restraint. The LATCH system eliminates the need to use seat belts to secure the child restraint to the rear seats.

Lower anchors are metal bars built into the vehicle. There are two lower anchors for each LATCH seating position that will accommodate a child restraint with lower attachments.

To use the LATCH system in your vehicle, you must have a child restraint with LATCH attachments.

The child seat manufacturer will provide you with instructions on how to use the child seat with its attachments for the LATCH lower anchors.

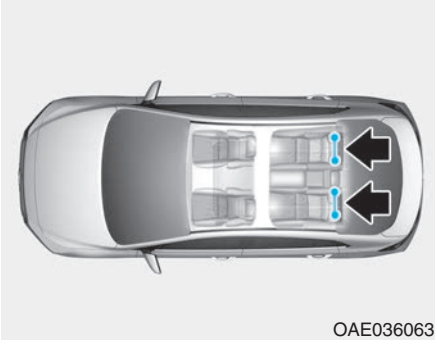

OAE036063

LATCH anchors have been provided in the left and right outboard rear seating positions. Their locations are shown in the illustration. There are no LATCH anchors provided for the center rear seating position.

⚠ WARNING

Do not attempt to install a child restraint system using LATCH anchors in the rear center seating position. There are no LATCH anchors provided for this seat. Using the outboard seat anchors can damage the anchors which may break or fail in a collision resulting in serious injury or death.

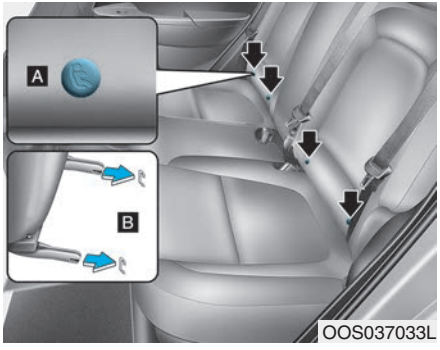

OOS037033L

[A] : ISOFIX Anchorage Position Indicator,

[B] : ISOFIX Anchorage

The lower anchor position indicator symbols are located on the left and right rear seat backs to identify the position of the lower anchors in your vehicle (see arrows in illustration).

The LATCH anchors are located between the seatback and the seat cushion of the rear seat left and right outboard seating positions.

Securing a child restraint with the LATCH anchors system

To install a LATCH-compatible child restraint in either of the rear outboard seating positions:

1. Move the seat belt buckle away from the lower anchors.
2. Move any other objects away from the anchors that could prevent a secure connection between the child restraint and the lower anchors.
3. Place the child restraint on the vehicle seat, then attach the seat to the lower anchors according to the instructions provided by the child restraint manufacturer.
4. Follow the child restraint instructions for properly adjusting and tightening the lower attachments on the child restraint to the lower anchors.

⚠ WARNING

Take the following precautions when using the LATCH system:

- **Read and follow all installation instructions provided with your child restraint system.**
- **To prevent the child from reaching and taking hold of unretracted seat belts, buckle all unused rear seat belts and retract the seat belt webbing behind the child. Children can be strangled if a shoulder belt becomes wrapped around their neck and the seat belt tightens.**
- **NEVER attach more than one child restraint to a single anchor. This could cause the anchor or attachment to come loose or break.**
- **Always have the LATCH system inspected by your authorized HYUNDAI dealer after an accident. An accident can damage the LATCH system and may not properly secure the child restraint.**

NOTICE

The recommended weight for the LATCH system is under 65 lb (30 kg).

How to determine an appropriate child restraint weight:

Child weight + Child restraint weight < 65 lb (30kg)

Securing a child restraint seat with "Tether Anchor" system

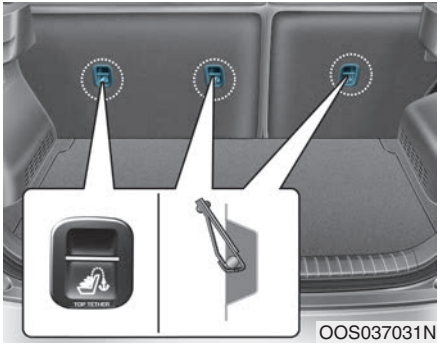

OOS037031N

First secure the child restraint with the LATCH lower anchors or the seat belt. If the child restraint manufacturer recommends that the top tether strap be attached, attach and tighten the top tether strap to the top tether strap anchor.

Child restraint hook holders are located on the rear of the seatbacks.

⚠ WARNING

Take the following precautions when installing the tether strap:

- **Read and follow all installation instructions provided with your child restraint system.**
- **NEVER attach more than one child restraint to a single tether anchor. This could cause the anchor or attachment to come loose or break.**
- **Do not attach the tether strap to anything other than the correct tether anchor. It may not work properly if attached to something else.**
- **Do not use the tether anchors for adult seat belts or harnesses, or for attaching other items or equipment to the vehicle.**

OOS037032N

To install the tether anchor:

1. Route the child restraint tether strap over the child restraint seatback. Route the tether strap under the head restraint and between the head restraint posts, or route the tether strap over the top of the vehicle seatback. Make sure the strap is not twisted.
2. Connect the tether strap hook to the tether anchor, then tighten the tether strap according to the child seat manufacturer's instructions to firmly secure the child restraint to the seat.
3. Check that the child restraint is securely attached to the seat by pushing and pulling the seat forward-and-back and side-to-side.

Securing a child restraint with lap/shoulder belt

When not using the LATCH system, all child restraints must be secured to a vehicle rear seat with the lap part of a lap/shoulder belt.

⚠ WARNING

ALWAYS place a rear-facing child restraint in the rear seat of the vehicle.

Placing a rear-facing child restraint in the front seat can result in serious injury or death if the child restraint is struck by an inflating air bag.

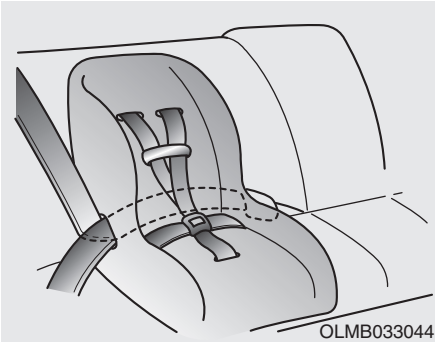

Automatic locking mode

Since all passenger seat belts move freely under normal conditions and only lock under extreme or emergency conditions (emergency locking mode), you must manually pull the seat belt all the way out to shift the retractor to the "Automatic Locking" mode to secure a child restraint.

The "Automatic Locking" mode will help prevent the normal movement of the child in the vehicle from causing the seat belt to loosen and compromise the child restraint system. To secure a child restraint system, use the following procedure.

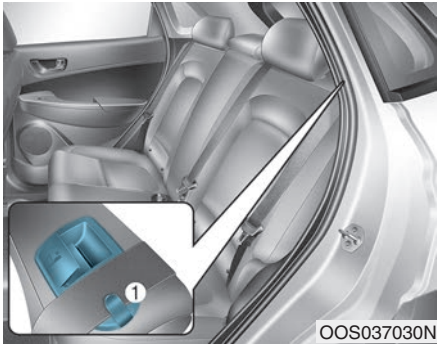

To install a child restraint system on the rear seats, do the following:

1. Place the child restraint system on a rear seat and route the lap/ shoulder belt around or through the child restraint, following the restraint manufacturer's instructions.

   Be sure the seat belt webbing is not twisted.

   Make sure to insert the belt into the guide(1).

NOTICE

When using the rear center seat belt, you should also refer to the "Rear Seat Belt – Passenger's 3-point system" section in this chapter.

OLMB033045

2. Fasten the lap/shoulder belt latch into the buckle. Listen for the distinct "click" sound.

Information

Position the release button so that it is easy to access in case of an emergency.

OLMB033097

3. Pull the shoulder portion of the seat belt all the way out. When the shoulder portion of the seat belt is fully extended, it will shift the retractor to the "Automatic Locking" (child restraint) mode.

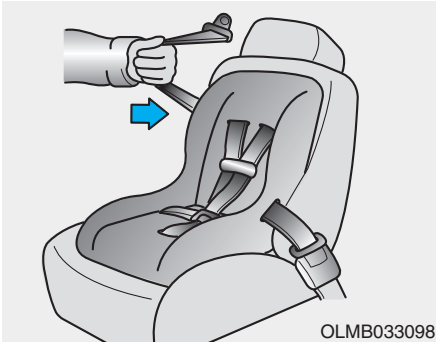
OLMB033098

4. Slowly allow the shoulder portion of the seat belt to retract and listen for an audible "clicking" or "ratcheting" sound. This indicates that the retractor is in the "Automatic Locking" mode. If no distinct sound is heard, repeat steps 3 and 4.

5. Remove as much slack from the belt as possible by pushing down on the child restraint system while feeding the shoulder belt back into the retractor.
6. Push and pull on the child restraint system to confirm that the seat belt is holding it firmly in place. If it is not, release the seat belt and repeat steps 2 through 6.
7. Double check that the retractor is in the "Automatic Locking" mode by attempting to pull more of the seat belt out of the retractor. If you cannot, the retractor is in the "Automatic Locking" mode.

If your CRS manufacturer instructs or recommends you to use a tether anchor with the lap/shoulder belt, refer to the previous pages for more information.

NOTICE

When the seat belt is allowed to retract to its fully stowed position, the retractor will automatically switch from the "Automatic Locking" mode to the emergency lock mode for normal adult usage.

⚠ WARNING

If the retractor is not in the "Automatic Locking" mode, the child restraint can move when your vehicle turns or stops suddenly. A child can be seriously injured or killed if the child restraint is not properly anchored in the car, including manually pulling the seat belt all the way out to shift the rectractor to the "Automatic Locking" mode.

To remove the child restraint, press the release button on the buckle and then pull the lap/shoulder belt out of the restraint and allow the seat belt to retract fully.

AIR BAG - ADVANCED SUPPLEMENTAL RESTRAINT SYSTEM

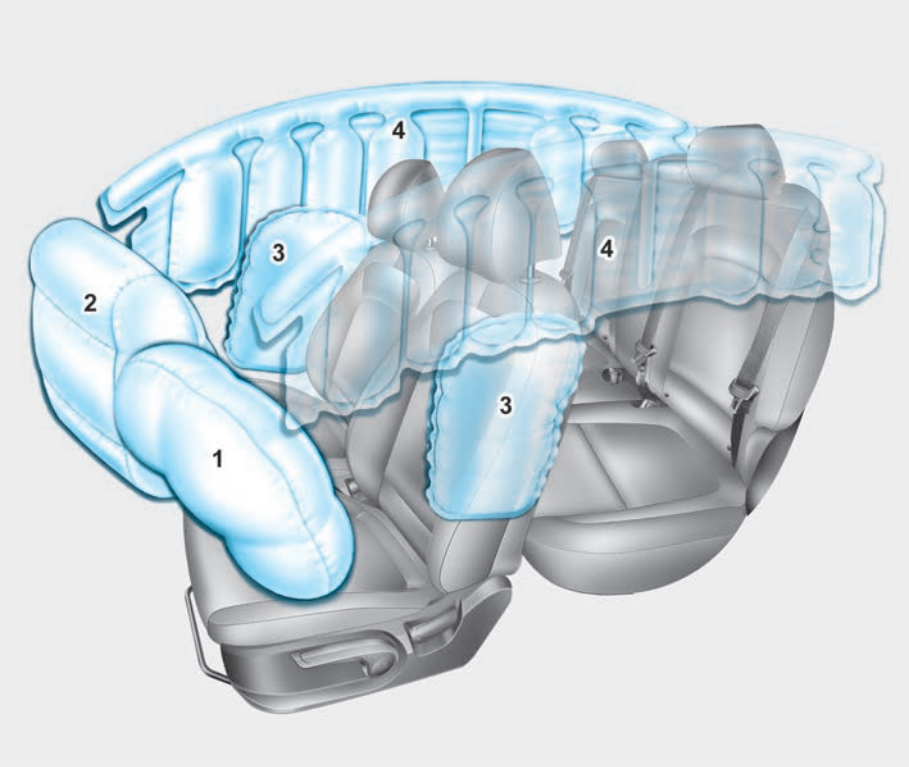

1. Driver's front air bag
2. Passenger's front air bag
3. Side air bag
4. Curtain air bag

The actual air bags in the vehicle may differ from the illustration.

OOS037034N

This vehicle is equipped with an Advanced Supplemental Air Bag System for the driver's seat and front passenger's seats.

The front air bags are designed to supplement the three-point seat belts. For these air bags to provide protection, the seat belts must be worn at all times when driving.

You can be severely injured or killed in an accident if you are not wearing a seat belt. Air bags are designed to supplement seat belts, but do not replace them. Also, air bags are not designed to deploy in every collision. In some accidents, the seat belts are the only restraint protecting you.

⚠ WARNING

AIR BAG SAFETY PRECAUTIONS

ALWAYS use seat belts and child restraints - every trip, every time, everyone! Even with air bags, you can be seriously injured or killed in a collision if you are improperly belted or not wearing your seat belt when the air bag inflates.

NEVER place a child in any child restraint or booster seat in the front passenger seat. An inflating air bag could forcefully strike the infant or child causing serious or fatal injuries.

ABC - Always Buckle Children under age 13 in the back seat. It is the safest place for children of any age to ride. If a child age 13 or older must be seated in the front seat, he or she must be properly belted and the seat should be moved as far back as possible.

All occupants should sit upright with the seatback in an upright position, centered on the seat cushion with their seat belt on, legs comfortably extended and their feet on the floor until the vehicle is parked and is turned off. If an occupant is out of position during an accident, the rapidly deploying air bag may forcefully contact the occupant causing serious or fatal injuries.

You and your passengers should never sit or lean unnecessarily close to the air bags or lean against the door or center console.

Move your seat as far back as possible from front air bags, while still maintaining control of the vehicle. The U.S. National Highway Traffic Safety Administration (NHTSA) recommends that drivers allow at least 10 inches (25 cm) between the center of the steering wheel and the chest.

Where Are the Air Bags?

Driver's and passenger's front air bags

Your vehicle is equipped with a Advanced Supplemental Restraint System (SRS) and lap/shoulder belts at both the driver and passenger seating positions.

The SRS consists of air bags which are located in the center of the steering wheel, in the driver's side lower crash pad below the steering wheel column and the passenger's side front panel pad above the glove box.

The air bags are labeled with the letters "AIR BAG" embossed on the pad covers.

■ Driver's front air bag

OOS037035

■ Passenger's front air bag

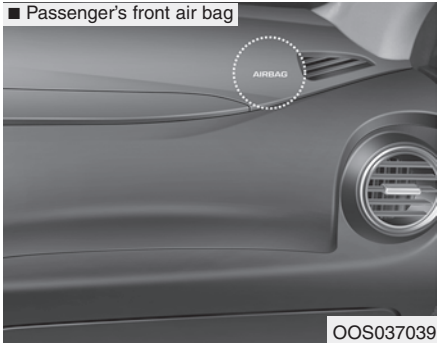

OOS037039

The purpose of the SRS is to provide the vehicle's driver and front passengers with additional protection than that offered by the seat belt system alone.

The advanced SRS offers the ability to control the air bag inflation within two levels. A first stage level is provided for moderate-severity impacts. A second stage level is provided for more severe impacts.

According to the impact severity, the SRS Control Module (SRSCM) controls the air bag inflation. Failure to properly wear seat belts can increase the risk or severity of injury in an accident.

⚠ WARNING

To reduce the risk of serious injury or death from an inflating front air bags, take the following precautions:

- **Seat belts must be worn at all times to help keep occupants positioned properly.**
- **Move your seat as far back as possible from front air bags, while still maintaining control of the vehicle.**
- **Never lean against the door or center console.**
- **Do not allow the front passenger to place their feet or legs on the dashboard.**
- **No objects (such as crash pad cover, cellular phone holder, cup holder, perfume or stickers) should be placed over or near the air bag modules on the steering wheel, instrument panel, windshield glass, and the front passenger's panel above the glove box. Such objects could cause harm if the vehicle is in a crash severe enough to cause the air bags to deploy.**

Side air bags

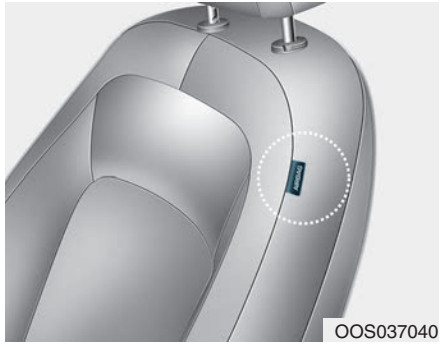
OOS037040

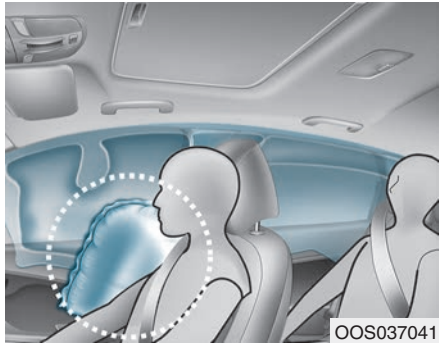
OOS037041

Your vehicle is equipped with a side air bag in each front seat. The purpose of the air bag is to provide the vehicle's driver and the front passenger with additional protection than that offered by the seat belt alone.

The side air bags are designed to deploy during certain side impact collisions, depending on the crash severity.

The side and curtain air bags on both sides of the vehicle may deploy if a rollover or possible rollover is detected.

The side air bags are not designed to deploy in all side impact or rollover situations.

⚠ WARNING

To reduce the risk of serious injury or death from an inflating side air bag, take the following precautions:

- **Seat belts must be worn at all times to help keep occupants positioned properly.**

- **Do not allow passengers to lean their heads or bodies onto doors, put their arms on the doors, stretch their arms out of the window, or place objects between the doors and seats.**
- **Hold the steering wheel at the 9 o'clock and 3 o'clock positions, to minimize the risk of injuries to your hands and arms.**
- **Do not use any accessory seat covers. This could reduce or prevent the effectiveness of the system.**
- **Do not place any objects over the air bag or between the air bag and yourself. Also, do not attach any objects around the area the air bag inflates such as the door, side door glass, front and rear pillar.**
- **Do not place any objects between the door and the seat. They may become dangerous projectiles if the side air bag inflates.**

- **Do not install any accessories on the side or near the side air bags.**
- **Do not put any objects between the side airbag label and seat cushion. It could cause harm if the vehicle is in a crash severe enough to cause the air bags to deploy.**
- **Do not cause impact to the doors when the ignition switch button is in the ON position as this may cause the side air bags to inflate.**
- **If the seat or seat cover is damaged, have the vehicle checked and repaired by an authorized HYUNDAI dealer.**

Curtain air bags

OOS037042

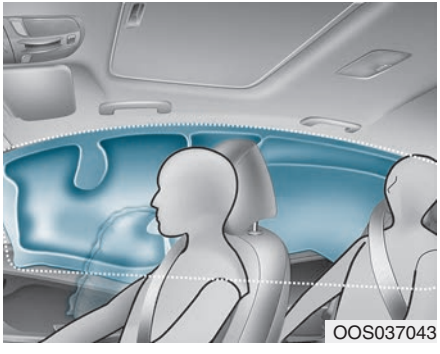
OOS037043

Curtain air bags are located along both sides of the roof rails above the front and rear doors.

They are designed to help protect the heads of the front seat occupants and the rear outboard seat occupants in certain side impact collisions.

The curtain air bags are designed to deploy during certain side impact collisions, depending on the crash severity.

The side and curtain air bags on both sides of the vehicle may deploy if a rollover or possible rollover is detected.

The curtain air bags are not designed to deploy in all side impact or rollover situations.

⚠ WARNING

To reduce the risk of serious injury or death from an inflating curtain air bag, take the following precautions:

- **All seat occupants must wear seat belts at all times to help keep occupants positioned properly.**
- **Properly secure child restraints as far away from the door as possible.**
- **Do not place any objects over the air bag. Also, do not attach any objects around the area the air bag inflates such as the door, side door glass, front and rear pillar, roof side rail.**
- **Do not hang other objects except clothes, especially hard or breakable objects. In an accident, it may cause vehicle damage or personal injury.**
- **Do not allow passengers to lean their heads or bodies onto doors, put their arms on the doors, stretch their arms out of the window, or place objects between the doors and seats.**
- **Do not open or repair the side curtain air bags.**

How Does the Air Bag System Operate?

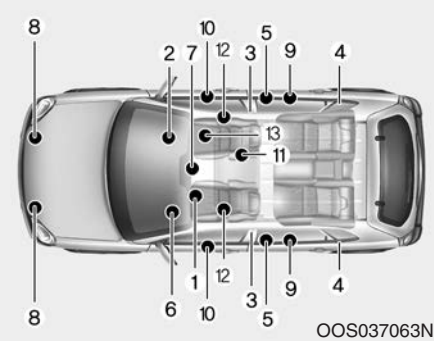

The SRS consists of the following components:

1. Driver's front air bag module
2. Passenger's front air bag module
3. Side air bag modules
4. Curtain air bag modules
5. Retractor pre-tensioner
6. Air bag warning light
7. SRS control module (SRSCM)/ Rollover sensor
8. Front impact sensors
9. Side impact sensors

10. Side pressure sensors
11. Seat belt buckle sensor
12. Emergency Fastening Device System
13. Occupant classification system

The SRSCM (Supplemental Restraint System Control Module) continually monitors all SRS components while the ignition switch is in the ON position to determine if a crash impact is severe enough to require air bag deployment or pre-tensioner seat belt deployment.

SRS warning light

The SRS (Supplement Restraint System) air bag warning light on the instrument panel displays the air bag symbol depicted in the illustration. The system checks the air bag electrical system for malfunctions. The light indicates that there is a potential malfunction with your air bag system, which could include your side and curtain air bags used for rollover protection.

⚠ WARNING

If your SRS malfunctions, the air bag may not inflate properly during an accident increasing the risk of serious injury or death.

If any of the following conditions occur, your SRS is malfunctioning:

- **The light does not turn on for approximately six seconds when the Engine Start/Stop button is in the ON position.**
- **The light stays on after illuminating for approximately six seconds.**
- **The light comes on while the vehicle is in motion.**
- **The light blinks when the engine is running.**

Have an authorized HYUNDAI dealer inspect the SRS as soon as possible if any of these conditions occur.

During a frontal collision, sensors will detect the vehicle's deceleration. If the rate of deceleration is high enough, the control unit will inflate the front air bags.

The front air bags help protect the driver and front passenger by responding to frontal impacts in which seat belts alone cannot provide adequate restraint. When needed, the side air bags help provide protection in the event of a side impact or rollover.

- Air bags are activated (able to inflate if necessary) only when the Engine Start/Stop button is in the ON position.
- Air bags inflate in the event of certain frontal or side collisions to help protect the occupants from serious physical injury.
- Generally, air bags are designed to inflate based upon the severity of a collision, its direction, etc. These two factors determine whether the sensors produce an electronic deployment/inflation signal.
- The front air bags will completely inflate and deflate in an instant. It is virtually impossible for you to see the air bags inflate during an accident. It is much more likely that you will simply see the deflated air bags hanging out of their storage compartments after the collision.
- In addition to inflating in certain side collisions, vehicles equipped with a rollover sensor, side and curtain air bags will inflate if the sensing system detects a rollover.

  When a rollover is detected, side and curtain air bags will remain inflated longer to help provide protection from ejection, especially when used in conjunction with the seat belts.
- To help provide protection, the air bags must inflate rapidly. The speed of air bag inflation is a consequence of extremely short time in which to inflate the air bag between the occupant and the vehicle structures before the occupant impacts those structures. This speed of inflation reduces the risk of serious or life-threatening injuries and is thus a necessary part of air bag design.

  However, the rapid air bag inflation can also cause injuries which can include facial abrasions, bruises and broken bones because the inflation speed also causes the air bags to expand with a great deal of force.
- There are even circumstances under which contact with the air bag can cause fatal injuries, especially if the occupant is positioned excessively close to the air bag.

You can take steps to help reduce the risk of being injured by an inflating air bag. The greatest risk is sitting too close to the air bag. An air bag needs about 10 inches (25 cm) of space to inflate. NHTSA recommends that drivers allow at least 10 inches (25 cm) between the center of the steering wheel and the chest.

⚠ WARNING

To reduce the risk of serious injury or death from an inflating air bag, take the following precautions:

- **NEVER place a child restraint in the front passenger seat.**

  Always properly restrain children under age 13 in the rear seats of the vehicle.
- **Adjust the front passenger's and driver's seats as far to the rear as possible while allowing you to maintain full control of the vehicle.**
- **Hold the steering wheel with hands at the 9 o'clock and 3 o'clock positions.**
- **Never place anything or anyone between the air bag and the seat occupant.**
- **Do not allow the front passenger to place their feet or legs on the dashboard.**

■ Driver's front air bag (1)

When the SRSCM detects a sufficiently severe impact to the front of the vehicle, it will automatically deploy the front air bags.

■ Driver's front air bag (2)

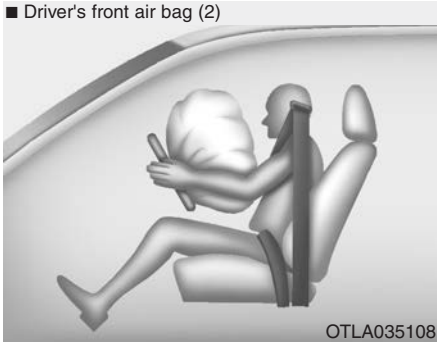

Upon deployment, tear seams molded directly into the pad covers will separate under pressure from the expansion of the air bags. Further opening of the covers allows full inflation of the air bags.

A fully inflated air bag, in combination with a properly worn seat belt, slows the driver or the front passenger forward motion, reducing the risk of head and chest injury.

■ Driver's front air bag (3)

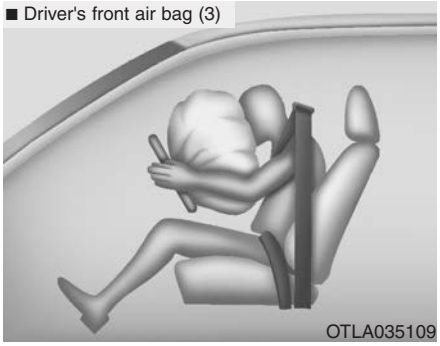

■ Passenger's front air bag

After complete inflation, the air bag immediately starts deflating, enabling the driver to maintain forward visibility and the ability to steer or operate other controls.

⚠ WARNING

To prevent objects from becoming dangerous projectiles when the passenger's air bag inflates:

- **Do not install or place any objects (drink holder, CD holder, stickers, etc.) on the front passenger's panel above the glove box where the passenger's air bag is located.**
- **Do not install a container of liquid air freshener near the instrument cluster or on the instrument panel surface.**

What to Expect After an Air Bag Inflates

After a frontal or side air bag inflates, it will deflate very quickly. Air bag inflation will not prevent the driver from seeing out of the windshield or being able to steer. Curtain air bags may remain partially inflated for some time after they deploy.

⚠ WARNING

After an air bag inflates, take the following precautions:

- **Open your windows and doors as soon as possible after impact to reduce prolonged exposure to the smoke and powder released by the inflating air bag.**
- **Do not touch the air bag storage area's internal components immediately after an air bag has inflated. The parts that come into contact with an inflating air bag may be very hot.**
- **Always wash exposed skin areas thoroughly with cold and mild soap.**
- **Always have an authorized HYUNDAI dealer replace the air bag immediately after deployment. Air bags are designed to be used only once.**

Noise and smoke from inflating air bag

When the air bags inflate, they make a loud noise and may produce smoke and powder in the air inside of the vehicle. This is normal and is a result of the ignition of the air bag inflator. After the air bag inflates, you may feel substantial discomfort in breathing because of the contact of your chest with both the seat belt and the air bag, as well as from breathing the smoke and powder. The powder may aggravate asthma for some people. If you experience breathing problems after an air bag deployment, seek medical attention immediately.

Though the smoke and powder are nontoxic, they may cause irritation to the skin, eyes, nose, throat, etc. If this is the case, wash and rinse with cold water immediately and seek medical attention if the symptoms persist.

Occupant Classification System (OCS)

■ For USA

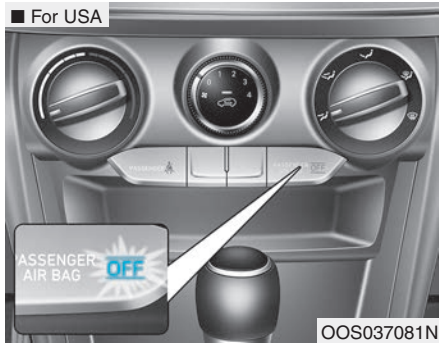

OOS037081N

■ For Canada

OOS037081C

Your vehicle is equipped with an Occupant Classification System (OCS) in the front passenger's seat.

Main components of the Occupant Classification System

- A detection device located within the front passenger seat cushion.
- Electronic system to determine whether the passenger air bag systems should be activated or deactivated.
- An indicator light located on the instrument panel which illuminates the words "PASSENGER AIR BAG OFF" indicating the front passenger air bag system is deactivated.
- The instrument panel air bag indicator light is interconnected with the OCS.

The OCS is designed to help detect the presence of a properly-seated front passenger and determine if the passenger's front air bag should be enabled (may inflate) or not.

The purpose is to help reduce the risk of injury or death from an inflating air bag to certain front passenger seat occupants, such as children, by requiring the air bag to be automatically turned OFF.

For example, if a child restraint of the type specified in the regulations is on the seat, the occupant classification sensor can detect it and cause the air bag to turn OFF.

Front passenger seat adult occupants who are properly seated and wearing the seat belt properly, should not cause the passenger air bag to be automatically turned OFF. For small adults it may be turned OFF, however, if the occupant does not sit in the seat properly (for example, by not sitting upright, by sitting on the edge of the seat, or by otherwise being out of position), this could cause the sensor to turn the air bag OFF.

You will find the "PASSENGER AIR BAG OFF" indicator on the center fascia panel. This system detects the conditions 1-4 in the following table and activates or deactivates the front passenger air bag based on these conditions.

Always be sure that you and all vehicle occupants are seated properly and wearing the seat belt properly for the most effective protection by the air bag and the seat belt.

The OCS may not function properly if the passenger takes actions which can affect the classification system. These include:

- Failing to sit in an upright position.
- Leaning against the door or center console.
- Sitting towards the sides of the front of the seat.
- Putting their legs on the dashboard or resting them on other locations which reduce the passenger weight on the front seat.
- Wearing the seat belt improperly.
- Reclining the seatback.
- Wearing a thick cloth like ski wear or hip protection wear.
- Putting an additional thick cushion on the seat.
- Putting electrical devices (e.g. notebook, satellite radio) on the seat with inverter charging.

Condition and operation in the front passenger Occupant Classification System

Condition detected by the occupant classification system	Indicator/Warning light		Devices
	"PASSENGER AIR BAG OFF" indicator light	SRS warning light	Front passenger air bag
1. Adult *1	Off	Off	Activated
2. Infant *2 or child restraint system with 12 months old *3 *4	On	Off	Deactivated
3. Unoccupied	On	Off	Deactivated
4. Malfunction in the system	Off	On	Activated

*1 The system judges a person of adult size as an adult. When a smaller adult sits in the front passenger seat, the system may recognize him/her as a child depending on his/her physique and posture.

*2 Do not allow children to ride in the front passenger seat. When a larger child who has outgrown a child restraint system sits in the front passenger seat, the system may recognize him/her as an adult depending upon his/her physique or sitting position.

*3 Never install a child restraint system on the front passenger seat.

*4 The PASSENGER AIR BAG "OFF" indicator may turn on or off when a child above 12 months to 12 years old (with or without child restraint system) sits in the front passenger seat. This is a normal condition.

⚠ WARNING

Riding in an improper position or placing weight on the front passenger's seat when it is unoccupied by a passenger adversely affects the OCS. To reduce the risk of serious injury or death:

- **NEVER put a heavy load in the front seat or seatback pocket, or hang any items on the front passenger seat.**

- **NEVER ride with the seat-back reclined when the vehicle is moving.**

- **NEVER place your feet on the front passenger seat-back.**

- **NEVER place your feet or legs on the dashboard.**

- **NEVER sit with your hips shifted towards the front of the seat.**

- **NEVER lean on the door or center console or sit on one side of the front passenger seat.**

- **Do not sit on the passenger seat wearing heavily padded clothes such as ski wear and hip protector.**

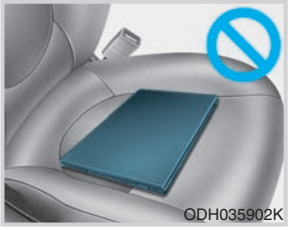

- **Do not place electronic devices such as laptops, DVD player, or conductive materials such as water bottles on the passenger seat.**
- **Do not use electronic devices such as laptops and satellite radios which use inverter chargers.**

- **Do not use car seat accessories such as thick blankets and cushions which cover up the car seat surface.**

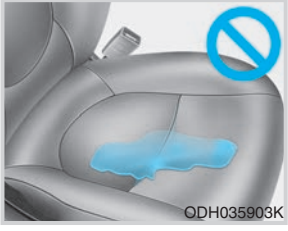

- **If large quantity of liquid has been spilled on the passenger seat, the air bag warning light may illuminate or malfunction.**

  Therefore, make sure the seat has been completely dried before driving the vehicle.

- **Do not place sharp objects on the front passenger seat. These may damage the occupant detection system, if they puncture the seat cushion.**
- **Do not place any items under the front passenger seat.**
- **When changing or replacing the seat or seat cover, use original items only. The OCS has been developed based on using original HYUNDAI car seats only. Altering or changing the authentic parts may result in system malfunction and increase risk of injury when in collision. Any of the above could interfere with the proper operation of the OCS sensor thereby increasing the risk of an injury in an accident.**

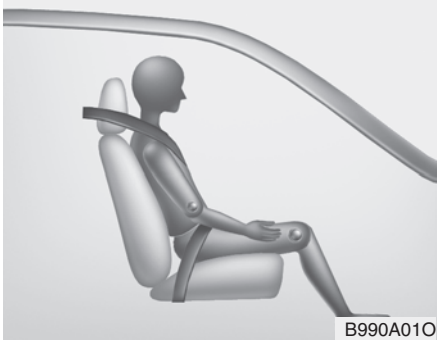

Proper seated position for OCS

If the "PASSENGER AIR BAG OFF" indicator is on when an adult is seated in the front passenger seat, place the Engine Start/Stop button in the OFF position and ask the passenger to sit properly (sitting upright with the seat back in an upright position, centered on the seat cushion with their seat belt on, legs comfortably extended and their feet on the floor). Restart the engine and have the person remain in that position. This will allow the system to detect the person and to enable the passenger air bag. If the "PASSENGER AIR BAG OFF" indicator is still on, ask the passenger to move to the rear seat.

⚠ WARNING

Never allow an adult passenger to ride in the front passenger seat when the "PASSENGER AIR BAG OFF" indicator is illuminated. During a collision, the air bag will not inflate if the indicator is illuminated. Have your passenger reposition himself in the seat. If the "PASSENGER AIR BAG OFF" indicator remains illuminated after the passenger repositions himself properly and the vehicle is restarted, have the passenger move to the rear seat because the air bag will not inflate.

NOTICE

The "PASSENGER AIR BAG OFF" indicator illuminates for approximately 4 seconds after the Engine Start/Stop button is in the ON position or after the engine is started. If the front passenger seat is occupied, the OCS will then classify the front passenger after several more seconds.

Do Not Install a Child Restraint in the Front Passenger's Seat

Even though your vehicle is equipped with the OCS, never install a child restraint in the front passenger's seat. An inflating air bag can forcefully strike a child or child restraint resulting in serious or fatal injury.

⚠ WARNING

- **NEVER place a rear-facing or front-facing child restraint in the front passenger's seat of the vehicle.**
- **An inflating frontal air bag could forcefully strike a child resulting in serious injury or death.**
- **Always properly restrain children in an appropriate child restraint in the rear seat of the vehicle.**

Why Didn't My Air Bag Go Off in a Collision?

Air bags are not designed to inflate in every collision. There are certain types of accidents in which the air bag would not be expected to provide additional protection. These include rear impacts, second or third collisions in multiple impact accidents, as well as low speed impacts. Damage to the vehicle indicates a collision energy absorption, and is not an indicator of whether or not an air bag should have inflated.

Air bag collision sensors

⚠ WARNING

To reduce the risk of an air bag deploying unexpectedly and causing serious injury or death:

- **Do not hit or allow any objects to impact the locations where air bags or sensors are installed.**
- **Do not perform maintenance on or around the air bag sensors. If the location or angle of the sensors is altered, the air bags may deploy when they should not or may not deploy when they should.**
- **Do not install bumper guards or replace the bumper with a non-genuine HYUNDAI parts. This may adversely affect the collision and air bag deployment performance.**
- **Place the ignition switch in the LOCK/OFF or ACC position when the vehicle is being towed to prevent inadvertent air bag deployment.**
- **Have all air bag repairs conducted by an authorized HYUNDAI dealer.**

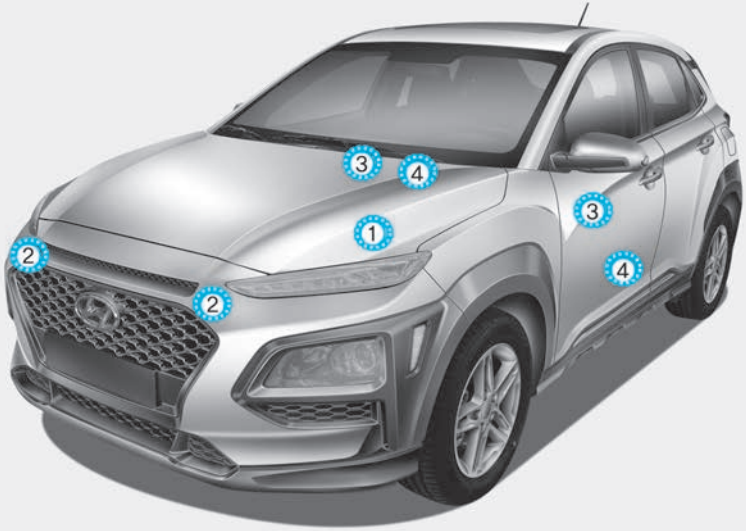

1. SRS control module/Rollover sensor
2. Front impact sensor
3. Side pressure sensor
4. Side impact sensor

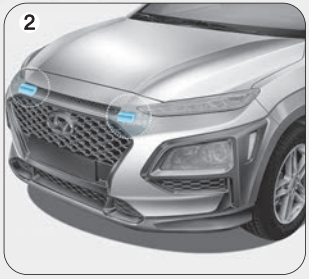

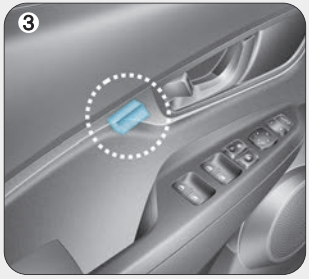

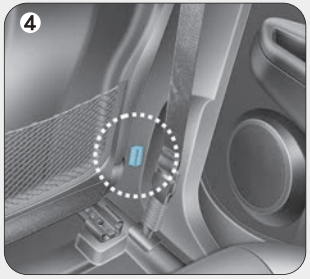

OOS037044/OOS037045/OOS037046/OOS037047/OOS037048

Air bag inflation conditions

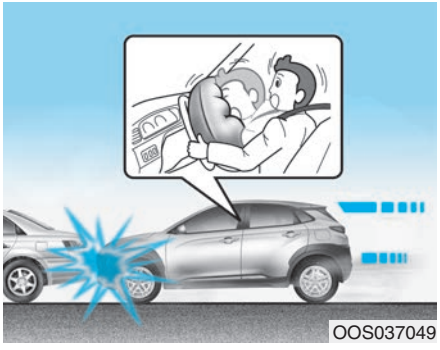

Front air bags

Front air bags are designed to inflate in a frontal collision depending on the severity of impact of the front collision.

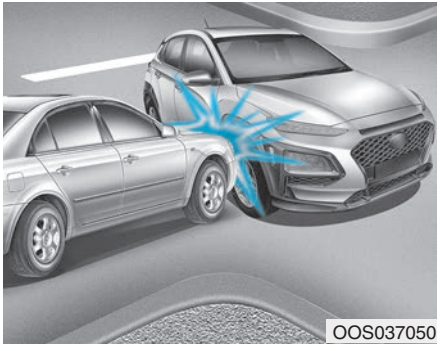

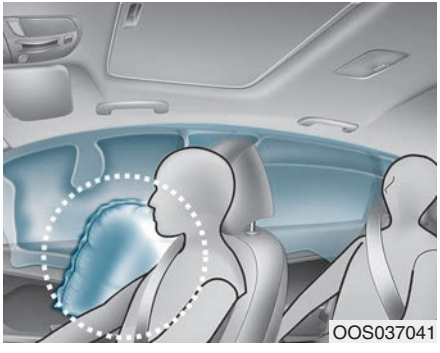

Side and curtain air bags

Side and curtain air bags are designed to inflate when an impact is detected by side collision sensors depending on the severity of impact resulting from a side impact collision.

Although the driver's and front passenger's air bags are designed to inflate only in frontal collisions, they also may inflate in other types of collisions if the front impact sensors detect a sufficient impact. Side and curtain air bags are designed to inflate only in side impact collisions or rollover situations, but they may inflate in other collisions if the side impact sensors detect a sufficient impact.

If the vehicle chassis is impacted by bumps or objects on unimproved roads, the air bags may deploy. Drive carefully on unimproved roads or on surfaces not designed for vehicle traffic to prevent unintended air bag deployment.

Air bag non-inflation conditions

OOS037052

In certain low-speed collisions the air bags may not deploy. The air bags are designed not to deploy in such cases because they may not provide benefits beyond the protection of the seat belts.

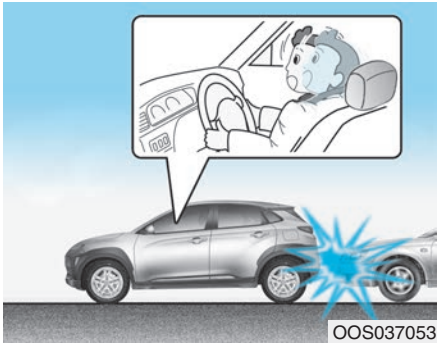
OOS037053

Front air bags are not designed to inflate in rear collisions, because occupants are moved backward by the force of the impact. In this case, inflated air bags would not provide any additional benefit.

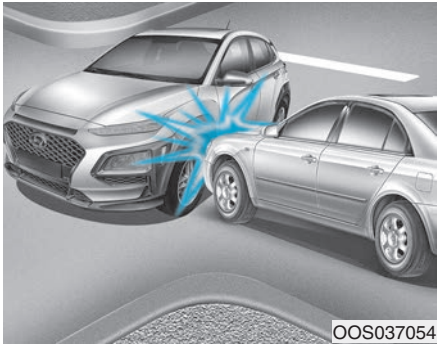
OOS037054

Front air bags may not inflate in side impact collisions, because occupants move in the direction of the collision, and thus in side impacts, front air bag deployment would not provide additional occupant protection.

However, side and curtain air bags may inflate depending on the severity of impact.

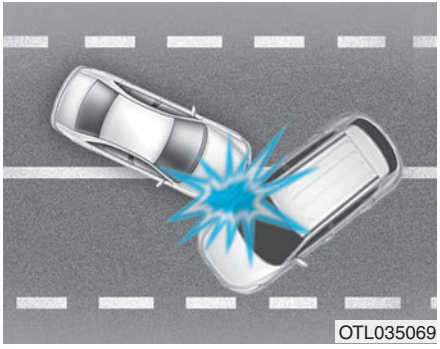
OTL035069

In an angled collision, the force of impact may direct the occupants in a direction where the air bags would not be able to provide any additional benefit, and thus the sensors may not deploy any air bags.

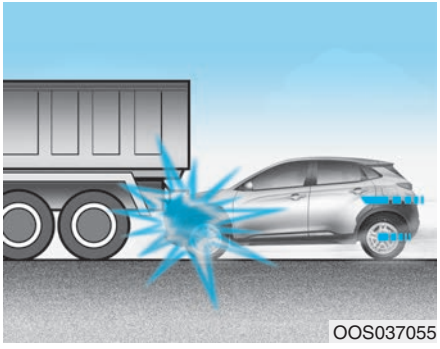
OOS037055

Just before impact, drivers often brake heavily. Such heavy braking lowers the front portion of the vehicle causing it to "ride" under a vehicle with a higher ground clearance. Air bags may not inflate in this "underride" situation because deceleration forces that are detected by sensors may be significantly reduced by such "underride" collisions.

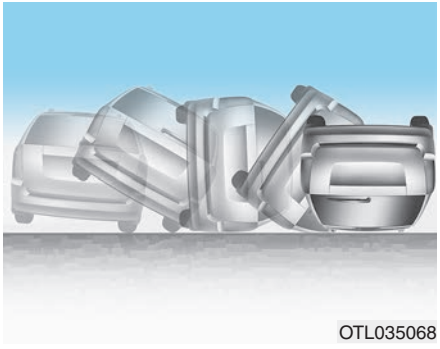
OTL035068

Front air bags may not inflate in rollover accidents because air bag deployment could not provide protection to the occupants.

However, side and curtain air bags may inflate when the vehicle is rolled over by a side impact collision.

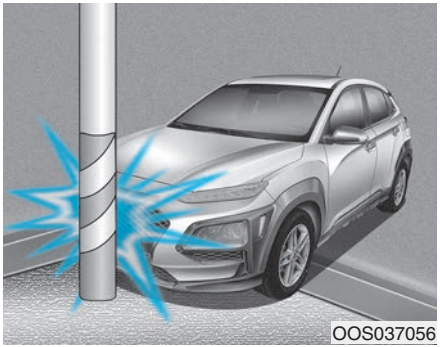

Air bags may not inflate if the vehicle collides with objects such as utility poles or trees, where the point of impact is concentrated and the collision energy is absorbed by the vehicle structure.

SRS Care

The SRS is virtually maintenance-free and there are no parts you can safely service by yourself. If the SRS air bag warning light does not illuminate when the ignition switch is in the ON position, or continuously remains on, have your vehicle immediately inspected by an authorized HYUNDAI dealer.

Any work on the SRS system, such as removing, installing, repairing, or any work on the steering wheel, the front passenger's panel, front seats and roof rails must be performed by an authorized HYUNDAI dealer. Improper handling of the SRS system may result in serious personal injury.

⚠ WARNING

To reduce the risk of serious injury or death, take the following precautions:

- **Do not attempt to modify or disconnect the SRS components or wiring, including the addition of any kind of badges to the pad covers or modifications to the body structure.**
- **Do not place objects over or near the air bag modules on the steering wheel, instrument panel, or the front passenger's panel above the glove box.**
- **Clean the air bag pad covers with a soft cloth moistened with plain water. Solvents or cleaners could adversely affect the air bag covers and proper deployment of the system.**
- **Always have inflated air bags replaced by an authorized HYUNDAI dealer.**

- **If components of the air bag system must be discarded, or if the vehicle must be scrapped, certain safety precautions must be observed. Consult an authorized HYUNDAI dealer for the necessary information. Failure to follow these precautions could increase the risk of personal injury.**

Additional Safety Precautions

Passengers should not move out of or change seats while the vehicle is moving. A passenger who is not wearing a seat belt during a crash or emergency stop can be thrown against the inside of the vehicle, against other occupants, or be ejected from the vehicle.

Do not use any accessories on seat belts. Devices claiming to improve occupant comfort or reposition the seat belt can reduce the protection provided by the seat belt and increase the chance of serious injury in a crash.

Do not modify the front seats.

Modification of the front seats could interfere with the operation of the supplemental restraint system sensing components or side air bags.

Do not place items under the front seats. Placing items under the front seats could interfere with the operation of the supplemental restraint system sensing components and wiring harnesses.

Do not cause impact to the doors. Impact to the doors when the Engine Start/Stop button is in the ON position may cause the air bags to inflate.

Modifications to accommodate disabilities. If you require modification to your vehicle to accommodate a disability, contact the HYUNDAI Customer Connect Center at 800-633-5151.

Adding equipment to or modifying your air bag equipped vehicle

If you modify your vehicle by changing your vehicle's frame, bumper system, front end or side sheet metal or ride height, this may affect the operation of your vehicle's air bag system.

Air Bag Warning Labels

Air bag warning labels, required by the U.S. National Highway Traffic Safety Administration (NHTSA), are attached to alert the driver and passengers of potential risks of the air bag system. Be sure to read all of the information about the air bags that are installed on your vehicle in this Owners Manual.

Convenient features of your vehicle

Accessing Your Vehicle 3-3
Remote Key 3-3
Smart Key 3-6
Immobilizer System 3-11
Door Locks 3-13
Operating Door Locks from Outside the Vehicle 3-13
Operating Door Locks from Inside the Vehicle 3-14
Automatic Door Lock and Unlock Features 3-17
Child-Protector Rear Door Locks 3-17
Theft-Alarm System 3-18
Steering Wheel 3-19
Electric Power Steering (EPS) 3-19
Tilt Steering / Telescope Steering 3-20
Horn 3-20
Heated Steering Wheel (for Canada) 3-21
Mirrors 3-21
Inside Rearview Mirror 3-21
Side View Mirrors 3-31
Windows 3-33
Power Windows 3-34
Sunroof 3-37
Sunroof opening and closing 3-38
Sliding the sunroof 3-38
Tilting the sunroof 3-38
Sunshade 3-39
Resetting the sunroof 3-39
Sunroof Open Warning 3-40
Exterior Features 3-41
Hood 3-41
Liftgate 3-42
Fuel Filler Door 3-44
Instrument Cluster 3-47
Instrument Cluster Control 3-48
Gauges and Meters 3-49
Transmission shift indicator 3-52
Warning and Indicator Lights 3-53
LCD Display Messages 3-65
LCD Display 3-70
LCD Display Control 3-70
LCD Display Modes 3-71
Trip Computer 3-81
Head Up Display (HUD) 3-85
Lighting 3-88
Exterior Lights 3-88
Smart cornering lamp 3-95
Interior Lights 3-96
Welcome System 3-98

3

Wipers and Washers.....3-99
Windshield Wipers.....3-99
Windshield Washers.....3-101
Rear Window Wiper and Washer.....3-102
Driver Assist System.....3-103
Rear view monitor.....3-103
Rear Parking Sensor Warning System.....3-104
Rear Parking Sensor Warning System Precautions.....3-107
Manual Climate Control System.....3-108
Heating and Air Conditioning.....3-109
System Operation.....3-112
System Maintenance.....3-114
Automatic Climate Control System.....3-116
Automatic Temperature Control Mode.....3-117
Manual Temperature Control Mode.....3-118
System Operation.....3-121
System Maintenance.....3-123
Windshield Defrosting and Defogging.....3-125
Auto Defogging System (Additional Feature with Automatic Temperature Control System).....3-127
Rear Window Defroster.....3-129
Climate Control Additional Features.....3-130
Cluster ionizer.....3-130
Automatic Ventilation.....3-130
Sunroof Inside Air Recirculation.....3-130
Storage Compartment.....3-131
Center Console Storage.....3-131
Glove Box.....3-131
Sunglass Holder.....3-132
Multi Box.....3-132
Interior Features.....3-133
Cup Holder.....3-133
Sunvisor.....3-134
Power Outlet.....3-135
Wireless Cellular Phone Charging System.....3-136
Clock.....3-138
Clothes Hanger.....3-138
Floor Mat Anchor(s).....3-139
Luggage Net Holder.....3-139
Cargo Area Cover.....3-140
Luggage tray.....3-141
Exterior Features.....3-142
Roof Side Rails.....3-142

ACCESSING YOUR VEHICLE

Remote Key (if equipped)

Your HYUNDAI uses a remote key, which you can use to lock or unlock the driver and passenger doors or the rear liftgate.

1. Door Lock
2. Door Unlock
3. Liftgate Unlock
4. Panic

Locking Your Vehicle

To lock your vehicle:

1. Make sure all doors, the engine hood and the liftgate are closed.
2. Press the Door Lock button (1) on the remote key to lock all doors.
3. If the Door Lock button (1) is pressed once more within four seconds, the horn will beep once and the hazard warning lights will blink.
4. Make sure the doors are locked by checking the position of the door lock button inside the vehicle.

Information

After locking the doors, if you press the Door Lock button again within four seconds, the hazard warning lights will blink and the horn will sound one time to confirm that the doors are locked.

⚠ WARNING

Do not leave the keys in your vehicle with unsupervised children. Unattended children could place the key in the ignition switch and may operate power windows or other controls, or even make the vehicle move, which could result in serious injury or death.

Unlocking your vehicle

To unlock your vehicle :

1. Press the Door Unlock button (2) on the remote key.
2. The driver's door will unlock. The hazard warning lights will blink two times.

   Two press unlock setting:

   If you press the Door Unlock button on the remote key again within four seconds, then all the doors will unlock.

   Two press unlock setting can be changed according to owner's preference in the cluster User Settings mode or with the remote key.

   • User settings mode method:

   Select or deselect the 'Two Press Unlock' feature in the User Settings mode on the cluster LCD display (User Settings → Door → Two Press Unlock).

   • Remote key method:

   Press and hold both Door Lock (1) and Door Unlock (2) buttons at the same time until the hazard warning lights blink.

   Now all doors will unlock when the Door Unlock button is pressed one time. To change the setting back, repeat this procedure.

Information

After unlocking the doors, the doors will automatically relock after 30 seconds unless a door is opened.

Liftgate unlocking

To unlock the liftgate :

1. Press and hold the Liftgate Unlock button (3) on the remote key for more than one second.
2. The hazard warning lights will blink two times and the liftgate will be unlocked.

Once the liftgate is opened and then closed, the liftgate will lock automatically.

Information

The word "HOLD" is written on the button to inform you that you must press and hold the button for more than one second.

Panic button (if equipped)

Press and hold the Panic button (4) for more than one second. The horn sounds and hazard warning lights flash for about 30 seconds.

To cancel the panic mode, press any button on the remote key.

Start-up

For information, refer to the "Key Ignition Switch" section in chapter 5.

NOTICE

To prevent damaging the remote key:

- **Keep the remote key away from water or any liquid and fire. Internal circuits may malfunction if the inside of the remote key gets damp (from liquids or moisture) or if it is heated. This can exclude the remote key from being covered under warranty.**
- **Avoid dropping or throwing the remote key.**
- **Protect the remote key from extreme temperatures.**

Mechanical key

OPD046003

If the remote key does not operate normally, you can lock or unlock the driver's door by using the mechanical key.

To unfold the mechanical key, press the release button on the remote.

To return the key to its stored position, press the release button and fold the key back into the remote.

Remote key precautions

The remote key will not work if any of the following occur:

- The key is in the ignition switch.
- You exceed the operating distance limit (about 90 feet [30 m]).
- The remote key battery is weak.
- Other vehicles or objects may be blocking the signal.
- The weather is extremely cold.
- The remote key is close to a radio transmitter such as a radio station or an airport which can interfere with normal operation of the remote key.

If the remote key does not work correctly, open and close the door with the mechanical key. If you have a problem with the remote key contact an authorized HYUNDAI dealer.

If the remote key is in close proximity to your mobile phone, the signal could be blocked by your mobile phone's normal operational signals. This is specifically relevant when the phone is active such as making and receiving calls, text messaging, and/or sending/receiving emails.

When possible, avoid placing the remote key and your mobile phone in the same location such as a pants or jacket pocket in order to avoid interference between the two devices.

i Information

This device complies with Part 15 of the FCC rules.

Operation is subject to the following three conditions:

1. **This device may not cause harmful interference.**
2. **This device must accept any interference received, including interference that may cause undesired operation.**
3. **Changes or modifications not expressly approved by the party responsible for compliance could void the user's authority to operate the device.**

NOTICE

Keep the remote key away from electromagnetic materials that block electromagnetic waves to the key surface.

Battery replacement

OPD046002

If the remote key is not working properly, try replacing the battery with a new one.

Battery Type: CR2032

To replace the battery:

1. Insert a slim tool into the slot and gently pry open the cover.
2. Using a screw driver, remove the battery cover.
3. Remove the old battery and insert the new battery. Make sure the battery position is correct.
4. Reinstall the battery cover and key cover in the reverse order of removal.

If you suspect your remote key might have sustained some damage, or you feel your remote key is not working correctly contact an authorized HYUNDAI dealer.

Information

An inappropriately disposed battery can be harmful to the environment and human health. Dispose of the battery according to your local law(s) or regulations.

Smart Key (if equipped)

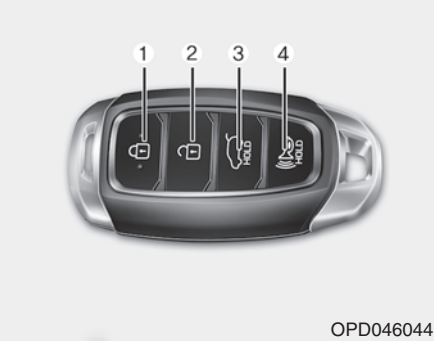

OPD046044

Your HYUNDAI uses a Smart Key, which you can use to lock or unlock the driver and passenger doors or the rear liftgate.

1. Door Lock
2. Door Unlock
3. Liftgate Unlock
4. Panic

Locking your vehicle

To lock your vehicle using the door handle button or the Smart Key:

1. Close all doors, hood and liftgate.
2. Either press the door handle button or press the Door Lock button (1) on the smart key.
3. The hazard warning lights will blink and the chime will sound once.
4. When the doors are locked, the indicator light on the central door lock/unlock switch will be illuminated.

Information

The door handle button will only operate when the smart key is within 28~40 inches (0.7~1 m) from the outside door handle.

Note that you cannot lock your vehicle using the door handle button if any of the following occur:

- The Smart Key is in the vehicle.
- The Engine Start/Stop button is in ACC or ON position.
- Any of the doors are open except for the liftgate.

⚠ WARNING

Do not leave the Smart Key in your vehicle with unsupervised children. Unattended children could press the Engine Start/Stop button and may operate power windows or other controls, or even make the vehicle move, which could result in serious injury or death.

Unlocking your vehicle

To unlock your vehicle:

1. Make sure you have the smart key in your possession.
2. Press either the button on the door handle or the Door Unock button (2) on the smart key. The driver's door will unlock and the hazard warning lights will blink two times.

3. Two Press Unlock Feature

The priority for unlocking the driver door only, or unlocking all the doors with one press may be adjusted in the User Settings menu in the LCD cluster display.

The Two Press Unlock feature, when enabled, will require the user to press the door unlock button once for driver door only and twice for unlocking all the doors.

Select or Deselect the Two Press Unlock Feature in the User Settings menu in the LCD cluster display. The option can be found under the following menu:

USER SETTINGS ➞ DOOR ➞ TWO PRESS UNLOCK

The Two Press Unlock Feature can also be enabled or disabled by pressing the door lock and unlock buttons simultaneously on the Key FOB:

Press and hold both the DOOR LOCK button and the DOOR UNLOCK button simultaneously until the hazard warning lights blink.

This will enable or disable the Two Press Unlock feature. Repeat this procedure to enable/disable the mode again.

Information

- **The door handle buttons will only operate when the smart key is within 28-40 inches (0.7~1m) from the outside door handle**
- **Either the driver or front passenger door can be opened with the door handle button when the smart key is within this range**
- **If you press the front passenger outside door handle with the smart key in your possession, all the doors will unlock**

Opening the liftgate

To unlock and open the liftgate:

1. Make sure you have the smart key in your possession.
2. Press either the liftgate handle release button on the vehicle or press and hold the Liftgate Unlock button on the smart key for more than one second. The hazard warning lights will blink two times and the liftgate latch will unlock.

NOTICE

The liftgate must be operated manually to open the liftgate. Once the liftgate latch is unlocked, pull upward on the liftgate handle to fully open the liftgate.

3. Once the liftgate is opened and then closed, the liftgate will lock automatically.

Information

- **The liftgate handle button will only operate when the smart key is within 28 inches (0.7 m) from the liftgate handle.**
- **The Liftgate Unlock button (3) will only unlock the liftgate. It will not release the latch and open the liftgate automatically. If the Liftgate Unlock button is used, someone must still press the liftgate handle button to open the liftgate.**

Panic button

Press and hold the Panic button (4) for more than one second. The horn sounds and hazard warning lights blink for about 30 seconds. To cancel the panic mode, press any button on the Smart Key.

Start-up

You can start the vehicle without inserting the key.

For information, refer to the "Engine Start/Stop Button" section in chapter 5.

NOTICE

To prevent damaging the smart key:

- **Keep the smart key in a cool, dry place to avoid damage or malfunction. Exposure to moisture or high temperature may cause the internal circuit of the smart key to malfunction which may not be covered under warranty.**
- **Avoid dropping or throwing the smart key.**
- **Protect the smart key from extreme temperatures.**

Mechanical key

If the Smart Key does not operate normally, you can lock or unlock the driver's door by using the mechanical key.

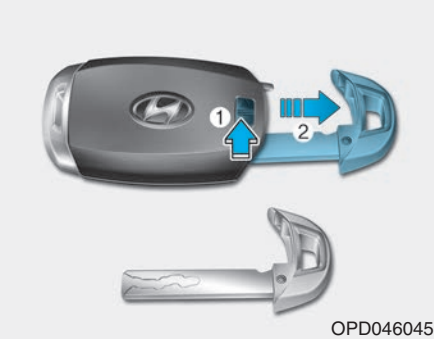

OPD046045

To remove the mechanical key from the smart key FOB, slide the release lever in the direction of the arrow (1) and then pull the mechanical key (2) outward.

To unlock the vehicle using the mechanical key. insert the mechanical key into the key hole in the driver door.

To reinstall the mechanical key into the FOB, insert the key in the top of the key FOB and push inward until a click sound is heard.

Loss of a smart key

A maximum of two Smart Keys can be registered to a single vehicle. If you happen to lose your smart key, you should immediately take the vehicle and remaining keys to your authorized HYUNDAI dealer or tow the vehicle, if necessary.

Smart key precautions

The smart key may not work if any of the following occur:

- The smart key is close to a radio transmitter such as a radio station or an airport which can interfere with normal operation of the transmitter.
- The smart key is near a mobile two way radio system or a cellular phone.
- Another vehicle's smart key is being operated close to your vehicle.

If the smart key does not work correctly, open and close the door with the mechanical key. If you have a problem with the smart key, contact an authorized HYUNDAI dealer.

If the smart key is in close proximity to your mobile phone, the signal could be blocked by your mobile phone's normal operational signals. This is specifically relevant when the phone is active such as making and receiving calls, text messaging, and/or sending/receiving emails. When possible, avoid keeping the remote key and your mobile phone in the same location such as a pants or jacket pocket in order to avoid interference between the two devices.

NOTICE

Keep the smart key away from electromagnetic materials that blocks electromagnetic waves to the key surface.

NOTICE

Always have the smart key with you when leaving the vehicle. If the smart key is left near the vehicle, the vehicle battery may be discharged.

i Information

This device complies with Part 15 of the FCC rules.

Operation is subject to the following three conditions:

1. **This device may not cause harmful interference.**
2. **This device must accept any interference received, including interference that may cause undesired operation.**
3. **Changes or modifications not expressly approved by the party responsible for compliance could void the user's authority to operate the device.**

Battery replacement

If the Smart Key is not working properly, try replacing the battery with a new one.

Battery Type: CR2032

To replace the battery:

1. Remove the mechanical key.
2. Use a slim tool to pry open the rear cover of the smart key.
3. Remove the old battery and insert the new battery. Make sure the battery position is correct.
4. Reinstall the rear cover of the smart key.

If you suspect your smart key might have sustained some damage, or you feel your smart key is not working correctly, contact an authorized HYUNDAI dealer.

Information

An inappropriately disposed battery can be harmful to the environment and human health. Dispose of the battery according to your local law(s) or regulations.

Immobilizer System (if equipped)

The immobilizer system protects your vehicle from theft. If an improperly coded key (or other device) is used, the engine's fuel system is disabled.

When the ignition switch is placed in the ON position, the immobilizer system indicator should come on briefly, then go off. If the indicator starts to blink, the system does not recognize the coding of the key.

Turn the ignition switch to the LOCK/OFF position, then turn the ignition switch to the ON position again.

In some circumstances, the vehicle may not recognize your smart key if another smart key device is nearby or a metal object such as a key chain is causing interference with the smart key.

If this occurs, your vehicle may not start. Remove any metal objects or additional keys near the smart key before attempting to start the vehicle again.

If the system repeatedly does not recognize the coding of the key, it is recommended that you contact your HYUNDAI dealer.

Do not attempt to alter this system or add other devices to it. Electrical problems could result that may make your vehicle inoperable.

⚠ WARNING

In order to prevent theft of your vehicle, do not leave spare keys anywhere in your vehicle. Your immobilizer password is a customer unique password and should be kept confidential.

NOTICE

The transponder in your key is an important part of the immobilizer system. It is designed to give years of trouble-free service, however you should avoid exposure to moisture, static electricity and rough handling. Immobilizer system malfunction could occur.

i Information

This device complies with Part 15 of the FCC rules.

Operation is subject to the following three conditions:

1. **This device may not cause harmful interference.**
2. **This device must accept any interference received, including interference that may cause undesired operation.**
3. **Changes or modifications not expressly approved by the party responsible for compliance could void the user's authority to operate the device.**

DOOR LOCKS

Operating Door Locks from Outside the Vehicle

Mechanical key

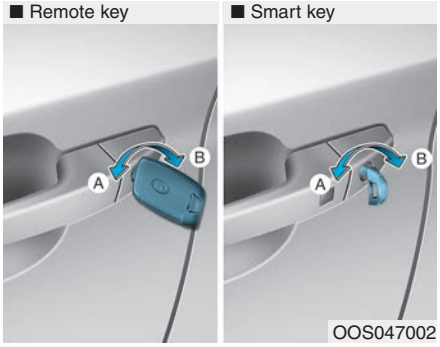

[A] : Lock, [B] : Unlock

If you lock the driver's door with a mechanical key, all vehicle doors will lock. If you unlock the driver's door with a mechanical key, you can open and close the driver's door only.

Once the doors are unlocked, they may be opened by pulling the door handle. When closing the door, push the door by hand. Make sure that doors are closed securely.

Remote key

To lock the doors, press the Door Lock button (1) on the remote key.

Press the Door Unlock button (2) on the remote key, the driver's door will unlock. If you press the Door Unlock button on the remote key again within four seconds, then all the doors will unlock.

Once the doors are unlocked, they may be opened by pulling the door handle.

When closing the door, push the door by hand. Make sure that doors are closed securely.

Smart key

Press the button on the driver's outside door handle while carrying the Smart Key with you or press the Door Unlock button on the Smart Key, the driver's door will unlock.

If you press the button on the front passenger's outside door, all doors will unlock.

Once the doors are unlocked, they may be opened by pulling the door handle.

When closing the door, push the door by hand. Make sure that doors are closed securely.

Information

- **In cold and wet climates, door lock and door mechanisms may not work properly due to freezing conditions.**
- **If the door is locked/unlocked multiple times in rapid succession with either the vehicle key or door lock switch, the system may stop operating temporarily in order to protect the circuit and prevent damage to system components.**
- **Two press unlock setting can be changed in the User Settings mode on the cluster.**

Operating Door Locks from Inside the Vehicle

With the door lock button

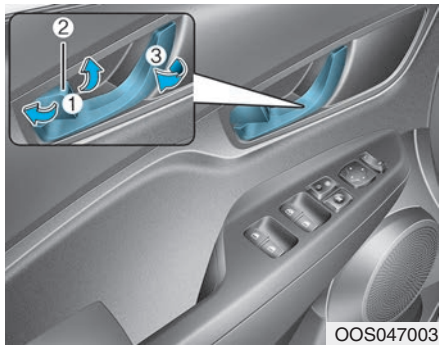

OOS047003

- To unlock a door, push the door lock button (1) to the "Unlock" position. The red mark (2) on the door lock button will be visible.
- To lock a door, push the door lock button (1) to the "Lock" position. If the door is locked properly, the red mark (2) on the door lock button will not be visible.
- To open a door, pull the door handle (3) outward.
- If the inner door handle of either the driver door or passenger door is pulled when the door lock button is in the lock position, the button is unlocked and the door will open.
- For Key Start Vehicles (w/ Remote Key)

  The front doors cannot be locked if the remote key is in the ignition switch and either of the front doors are open.
- For Push Button Start Vehicles (Smart Key)

  The doors cannot be locked if the smart key fob is inside the vehicle and any of the doors are open.

Information

If a power door lock ever fails to function while you are in the vehicle try one or more of the following techniques to exit:

- **Operate the door unlock feature repeatedly (both electronic and manual) while simultaneously pulling on the door handle.**
- **Operate the other door locks and handles, front and rear.**
- **Lower a front window and use the mechanical key to unlock the door from outside.**

With the central door lock switch

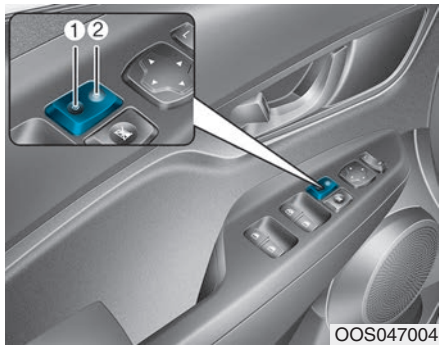

The driver side door armrest is equipped with a central door lock switch. The lock button is indicated by a (🔒) symbol. The unlock button is indicated by a (🔓) symbol.

When the lock button (2) is pressed, all the vehicle doors will lock.

When the unlock button (1) is pressed, all the vehicle doors will unlock.

- For Key Start Vehicles (with remote key)

  If the key is in the ignition switch and any door is opened, the doors will not lock even though the lock button (2) is pressed.

- For Push Button Start Vehicles (Smart Key)

  If the smart key is in the vehicle and any door is open, the doors will not lock even though the lock button (2) is pressed.

⚠ WARNING

- **The doors should always be fully closed and locked while the vehicle is in motion. If the doors are unlocked, the risk of being thrown from the vehicle in a crash is increased.**
- **Do not pull the inner door handle of the driver's or passenger's door while the vehicle is moving.**

⚠ WARNING

Do not leave children or animals unattended in your vehicle. An enclosed vehicle can become extremely hot, causing death or serious injury to unattended children or animals who cannot escape the vehicle. Children might operate features of the vehicle that could injure them, or they could encounter other harm, possibly from someone gaining entry to the vehicle.

⚠ WARNING

Always secure your vehicle.

Leaving your vehicle unlocked increases the potential risk to you or others from someone hiding in your vehicle.

To secure your vehicle, while depressing the brake, move the shift lever to the P (Park) position, engage the parking brake, and place the ignition switch in the LOCK/OFF position, close all windows, lock all doors, and always take the key with you.

⚠ CAUTION

Opening a door when something is approaching may cause damage or injury. Be careful when opening doors and watch for vehicles, motorcycles, bicycles or pedestrians approaching the vehicle in the path of the door.

⚠ WARNING

If you stay in the vehicle for a long time while the weather is very hot or cold, there are risks of injuries or danger to life. Do not lock the vehicle from the outside when someone is in the vehicle.

Automatic Door Lock and Unlock Features

Your vehicle is equipped with features that will automatically lock or unlock your vehicle based on settings you select in the LCD cluster display.

Auto LOCK - Enable on Speed

When this feature is set in the LCD cluster display, all the doors will be locked automatically when the vehicle exceeds 9 mph (15 kph).

Auto LOCK - Enable on Shift

When this feature is set in the LCD cluster display, all the doors will be locked automatically when the vehicle is shifted out of P (PARK) while the engine is running.

Auto UNLOCK - Enable on Shift

When this feature is set in the LCD cluster display, all the doors will be unlocked automatically when the vehicle is shifted back into P (PARK).

For more information on these features, refer to the LCD Display section later in this chapter.

Additional Unlock Safety Feature - Air Bag Deployment

As an additional safety feature, all doors will be automatically unlocked when an impact causes the air bags to deploy.

Child-Protector Rear Door Locks

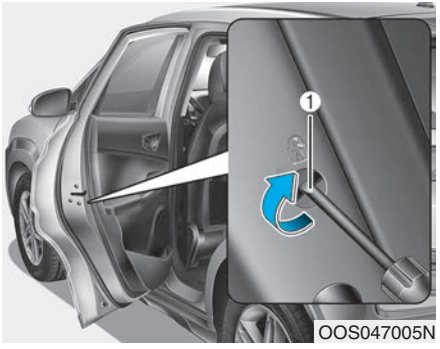

The child safety lock is provided to help prevent children seated in the rear from accidentally opening the rear doors. The rear door safety locks should be used whenever children are in the vehicle.

The child safety lock is located on the edge of each rear door. When the child safety lock is in the lock position, the rear door will not open if the inner door handle is pulled.

To lock the child safety lock, insert a small flat blade tool (like a screwdriver or similar) (1) into the slot and turn it to the lock position as shown.

To allow a rear door to be opened from inside the vehicle, unlock the child safety lock.

⚠ WARNING

If children accidently open the rear doors while the vehicle is in motion, they could fall out of the vehicle. The rear door safety locks should always be used whenever children are in the vehicle.

THEFT-ALARM SYSTEM

This system helps to protect your vehicle and valuables. The horn will sound and the hazard warning lights will blink continuously if any of the following occur:

- A door is opened without using the remote key or smart key.
- The liftgate is opened without using the remote key or smart key.
- The engine hood is opened.

The alarm continues for 30 seconds, then the system resets. To turn off the alarm, unlock the doors with the remote key or smart key.

The Theft Alarm System automatically sets 30 seconds after you lock the doors and the liftgate. For the system to activate, you must lock the doors and the liftgate from outside the vehicle with the remote key or smart key or by pressing the button on the outside of the door handle with the smart key in your possession.

The hazard warning lights will blink and the chime will sound once to indicate the system is armed.

Once the security system is set, opening any door, the liftgate, or the hood without using the remote key or smart key will cause the alarm to activate.

The Theft Alarm System will not set if the hood, the liftgate, or any door is not fully closed. If the system will not set, check the hood, the liftgate, or the doors are fully closed.

Do not attempt to alter this system or add other devices to it.

i Information

- **Do not lock the doors until all passengers have left the vehicle. If the remaining passenger leaves the vehicle when the system is armed, the alarm will be activated.**
- **If the vehicle is not disarmed with the remote key or smart key, open the doors by using the mechanical key and place the ignition switch in the ON position (for remote key) or start the engine (for smart key) by directly pressing the ignition switch with the smart key.**
- **If the system is disarmed by unlocking the vehicle, but neither a door or the liftgate is opened within 30 seconds, the doors will relock and the system will rearm automatically.**

STEERING WHEEL

Electric Power Steering (EPS)

The system assists you with steering the vehicle. If the vehicle is turned off or if the power steering system becomes inoperative, you may still steer the vehicle, but it will require increased steering effort.

Should you notice any change in the effort required to steer during normal vehicle operation, have the system checked by an authorized HYUNDAI dealer.

⚠ CAUTION

- **If the Electric Power Steering System does not operate normally, the warning light (⊘!) will illuminate on the instrument cluster. You may steer the vehicle, but it will require increased steering efforts. Take your vehicle to an authorized HYUNDAI dealer and have the system checked as soon as possible.**

- **When abnormality is detected in the electric power steering system, to prevent a deadly accident, the steering assist function will stop. At this time, the warning light turns on or blinks on the cluster. The steering wheel may become difficult to control or operate. Have your vehicle checked immediately, after moving the vehicle to a safe zone.**

i Information

The following symptoms may occur during normal vehicle operation:

- **The steering effort may be high immediately after placing the ignition switch in the ON position.**

  This happens as the system performs the EPS system diagnostics. When the diagnostics are completed, the steering wheel effort will return to its normal condition.
- **A click noise may be heard from the EPS relay after the ignition switch is in the ON or LOCK/OFF position.**
- **Motor noise may be heard when the vehicle is at a stop or at a low driving speed.**
- **When you operate the steering wheel in low temperatures, abnormal noise may occur. If the temperature rises, the noise will disappear. This is a normal condition.**
- **When an error is detected from the EPS, the steering effort assist function will not be activated in order to prevent fatal accidents. Instrument cluster warning lights may be on or the steering effort may be high. If these symptoms occur, drive the vehicle to a safe area as soon as it is safe to do so. Have the system checked by an authorized HYUNDAI dealer as soon as possible.**

Tilt Steering / Telescope Steering

When adjusting the steering wheel to a comfortable position, adjust the steering wheel so that it points toward your chest, not toward your face. Make sure you can see the instrument cluster warning lights and gauges. After adjusting, push the steering wheel both up and down to be certain it is locked in position. Always adjust the position of the steering wheel before driving.

⚠ WARNING

NEVER adjust the steering wheel while driving. This may cause loss of vehicle control resulting in an accident.

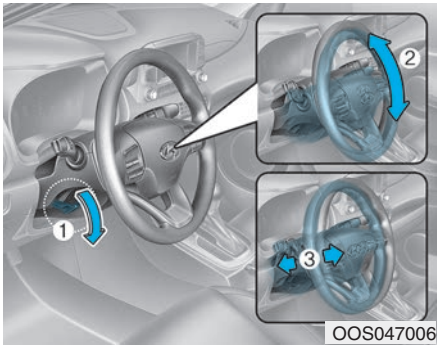

OOS047006

To adjust the steering wheel angle and height:

1. Pull down the lock-release lever (1).
2. Adjust the steering wheel to the desired angle (2) and distance forward/back (3).
3. Pull up the lock-release lever to lock the steering wheel in place.

i Information

Sometimes the lock release lever may not engage completely. This may occur when the gears of the locking mechanism do not completely mesh. If this occurs, pull down on the lock-release lever, readjust the steering wheel again, and then pull back up on the release lever to lock the steering wheel in place.

Horn

OOS047008

To sound the horn, press the area indicated by the horn symbol on your steering wheel (see illustration). The horn will operate only when this area is pressed.

NOTICE

Do not strike the horn severely to operate it, or hit it with your fist. Do not press on the horn with a sharp-pointed object.

Heated Steering Wheel (for Canada, if equipped)

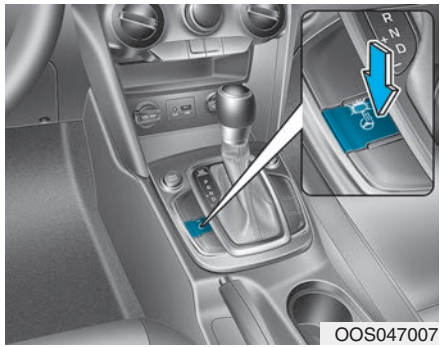

When the ignition switch is in the ON position or when the engine is running, press the heated steering wheel button to warm the steering wheel. The indicator on the button will illuminate.

To turn the heated steering wheel off, press the button again. The indicator on the button will turn off.

The heated steering wheel will automatically turn off after approximately 30 minutes.

NOTICE

Do not install any cover or accessory on the steering wheel. The cover or accessory could cause damage to the heated steering wheel system.

MIRRORS

Inside Rearview Mirror

Before driving your vehicle, check to see that your inside rearview mirror is properly positioned. Adjust the rearview mirror so that the view through the rear window is properly centered.

⚠ WARNING

Make sure your line of sight is not obstructed. Do not place objects in the rear seat, cargo area, or behind the rear headrests which could interfere with your vision through the rear window.

⚠ WARNING

To prevent serious injury during an accident or deployment of the air bag, do not modify the rearview mirror and do not install a wide mirror.

⚠ WARNING

NEVER adjust the mirror while driving. This may cause loss of vehicle control resulting in an accident.

NOTICE

When cleaning the mirror, use a paper towel or similar material dampened with glass cleaner. Do not spray glass cleaner directly on the mirror as this may cause the liquid cleaner to enter the mirror housing.

Day/night rearview mirror (if equipped)

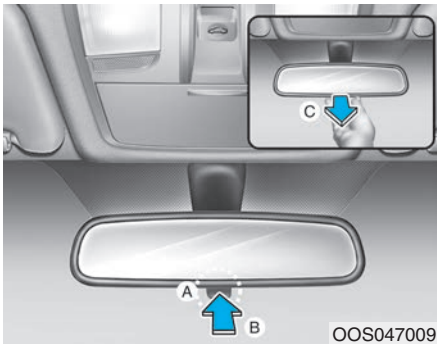

[A] : Day/night lever, [B] : Day, [C] : Night

Make this adjustment before you start driving and while the day/night lever is in the day position.

Pull the day/night lever towards you to reduce glare from the headlights of the vehicles behind you during night driving.

Remember that you lose some rearview clarity in the night position.

Electric Chromic Mirror (ECM) (if equipped)

Some vehicles come equipped with an electrochromic mirror that helps control glare while driving at night or under low light driving conditions.

When the engine is running, the glare is automatically controlled by the sensor mounted in the rearview mirror. The sensor detects the light level around the vehicle, and automatically adjusts to control the headlamp glare from vehicles behind you.

Whenever the shift lever is placed in R (Reverse), the mirror will automatically go to the brightest setting in order to improve the driver's view behind the vehicle.

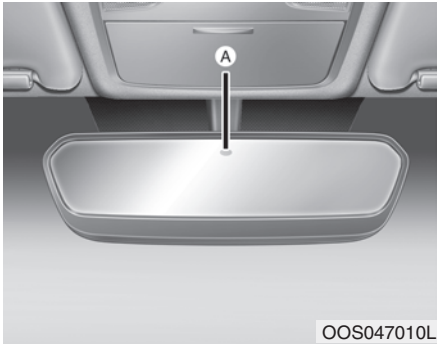

[A] : Indicator

NOTICE

When cleaning the mirror, use a paper towel or similar material dampened with glass cleaner. Do not spray glass cleaner directly on the mirror as that may cause the liquid cleaner to enter the mirror housing.

Blue Link® center (for Canada)

For details, refer to the Blue Link® Owner's Guide, Navigation Manual or Audio Manual.

Electrochromic mirror (ECM) with HomeLink® system, compass and Blue Link® (if equipped)

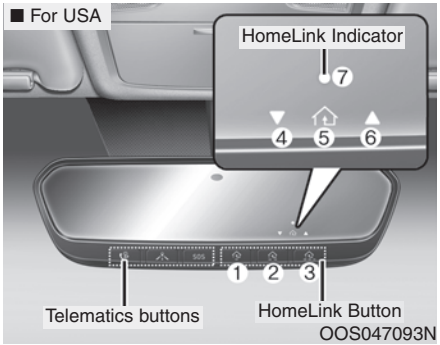

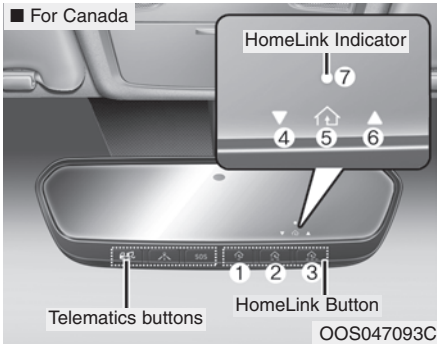

Your vehicle may be equipped with a Gentex Automatic-Dimming Mirror with a Z-Nav™ Electronic Compass Display and an Integrated HomeLink® Wireless Control System. During nighttime driving, this feature will automatically detect and reduce rearview mirror glare while the compass indicates the direction the vehicle is traveling. The HomeLink® Universal Transceiver allows you to activate your garage door(s), electric gate, home lighting, etc.

(1) HomeLink Channel 1
(2) HomeLink Channel 2
(3) HomeLink Channel 3
(4) Garage Door Opener Status Indicator : Closing or Closed
(5) HomeLink Operation Indicator
(6) Garage Door Opener Status Indicator : Opening or Opened
(7) HomeLink User Interface Indicator

Automatic-Dimming Night Vision Safety™ (NVS®) Mirror (if equipped)

The NVS® Mirror automatically reduces glare by monitoring light levels in the front and the rear of the vehicle. Any object that obstructs either light sensor will degrade the automatic dimming control feature.

For more information regarding NVS® mirrors and other applications, please refer to the Gentex website:

www.gentex.com

Your mirror will automatically dim upon detecting glare from the vehicles traveling behind you.

The mirror defaults to the ON position each time the vehicle is started.

Z-Nav™ Compass Display

The NVS™ Mirror in your vehicle is also equipped with a Z-Nav™ Compass that shows the vehicle Compass heading in the Display Window using the 8 basic cardinal headings (N, NE, E, SE, etc.).

Compass function

The Compass can be turned ON and OFF, but it returns to ON after the ignition is cycled.

OOS047094N

1. Press and release the Control Button within 1 second to turn the display feature OFF.
2. Press and release the Control Button again within 1 second to turn the display back ON.

Additional options can be set with press and hold sequences of the Control Button and are detailed below.

Information

Press the control button in the hole with a pointed object, such as the tip of a ballpoint pen or similar object.

There is a difference between magnetic north and true north. To compensate for this difference you will need to adjust the Zone setting based on where you live.

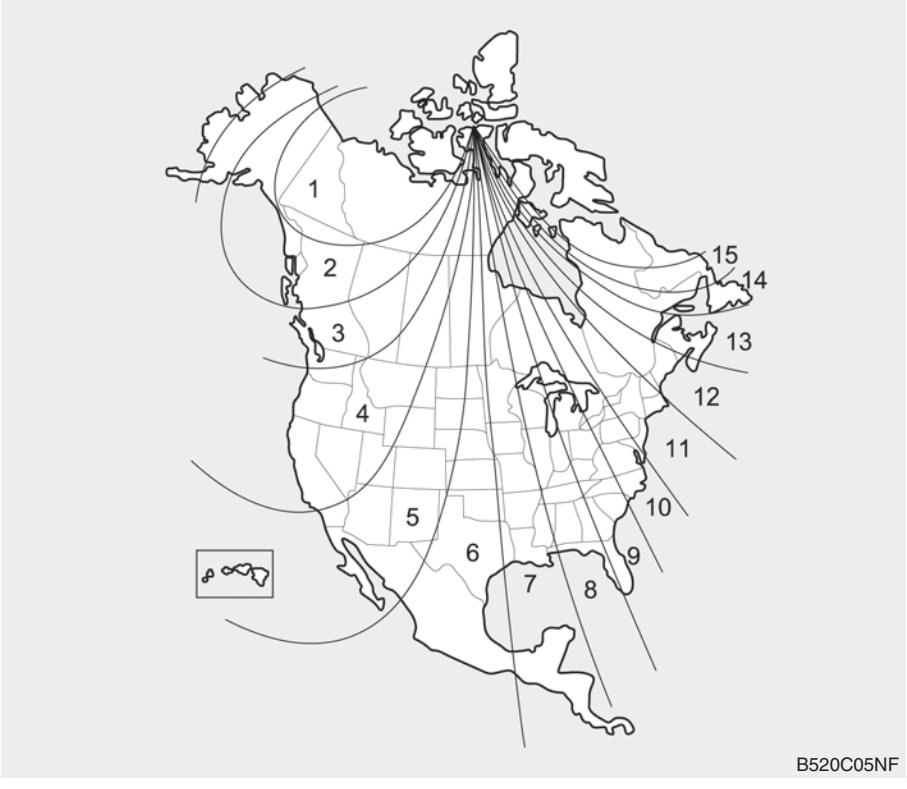

To adjust the Zone setting:

1. Determine the desired Zone Number based upon your current location on the Zone Map.
2. Press and hold the Control Button for up to 6 seconds, the current Zone Number will appear on the display.
3. Release and press the Control Button and then hold the Control Button again will cause the numbers to increment (Note: they will repeat …13, 14, 15, 1, 2, …). Releasing the button when the desired Zone Number appears on the display will set the new Zone.
4. Within about 5 seconds the compass will start displaying a compass heading again.

There are some conditions that can cause changes to the vehicle magnets, such as installing a ski rack or a CB antenna. Body repair work on the vehicle can also cause changes to the vehicle's magnetic field. In these situations, the compass will need to be re-calibrated to correct these changes.

If you need to recalibrate the compass:

1. Press and hold the Control Button for more than 6 seconds. When the compass memory is cleared, a "C" will appear in the display.
2. Drive the vehicle in 2 complete circles at less than 5 mph (8 km/h).

Integrated HomeLink® Wireless Control System

The HomeLink® Wireless Control System can replace up to three hand-held radio-frequency (RF) transmitters with a single built-in device. This innovative feature will learn the radio frequency codes of most current transmitters to operate devices such as gate operators, garage door openers, entry door locks, security systems, even home lighting. Both standard and rolling code-equipped transmitters can be programmed by following the outlined procedures.

Additional HomeLink® information can be found at: www.homelink.com, www.youtube.com/HomeLinkGentex or by calling 1-800-355-3515.

Retain the original transmitter of the RF device you are programming for use in other vehicles as well as for future HomeLink® programming. It is also suggested that upon the sale of the vehicle, the programmed HomeLink® buttons be erased for security purposes.

⚠ WARNING

Before programming HomeLink® to a garage door opener or gate operator, make sure people and objects are out of the way of the device to prevent potential harm or damage. Do not use the HomeLink® with any garage door opener that lacks the safety stop and reverse features required by U.S. federal safety standards (this includes any garage door opener model manufactured before April 1, 1982). A garage door that cannot detect an object - signaling the door to stop and reverse - does not meet current U.S. federal safety standards. Using a garage door opener without these features increases the risk of serious injury or death.

Programming HomeLink®

Please note the following:

- When programming a garage door opener, it is advised to park the vehicle outside of the garage.
- It is recommended that a new battery be placed in the hand-held transmitter of the device being programmed to HomeLink® for quicker training and accurate transmission of the radio-frequency signal.
- Some vehicles may require the ignition switch to be placed in the ACC (or "Accessories") position for programming and/or operation of HomeLink®.
- In the event that there are still programming difficulties or questions after following the programming steps listed below, contact HomeLink® at: www.homelink.com, www.youtube.com/HomeLinkGentex or by calling 1-800-355-3515.

Programming

To program most devices, follow these instructions:

OOS047095N

1. Press and release (1), (2) or (3) button.
   - If the indicator (4) is turned ON in Orange, go to Step 3) since it is a new programming.
   - If the indicator (4) is continuously turned ON or flashes in Green rapidly several times, go to Step 2) since it is a programmed button.
2. Press and hold the button you wish to program for approximately 15-25 seconds until the LED flashes in Orange for several times.
3. Hold the Garage Door Opener Original Transmitter (OT) near the HomeLink Mirror.

OOS047096N

4. Press the Original Transmitter (OT) button until the indicator (4) is turned continuously ON or flashes in Green for approximately 10 seconds and it indicates the programing is completed.

Information

- **Some garage door openers require to press the programmed button on the mirror up to three times right after the programming is just completed to operate the garage door.**

- **The indicator (4) is turned ON in Orange and flashes for about 60seconds, during the programing mode and if a programing is not succeeded within the 60 seconds, the programing mode will be abort.**

HomeLink® should now activate your rolling code equipped device.

Gate operator & Canadian programming

During programming, your handheld transmitter may automatically stop transmitting. Continue to press the Integrated HomeLink® Wireless Control System button while you press and re-press ("cycle") your handheld transmitter every two seconds until the frequency signal has been learned. The indicator light will flash slowly and then rapidly after several seconds upon successful training.

Operating HomeLink®

OOS047095N

1. Press and release one of the HomeLink buttons (1, 2 or 3) that programed.
2. The HomeLink indicator (4) will operate as below:
   - Indicates Green and is continuously ON (Fixed Code Garage Door Opener)
   - Flashes in Green rapidly (Rolling Code Garage Door Opener)

Erasing HomeLink® buttons

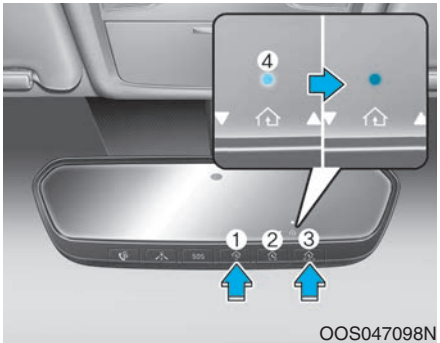

OOS047098N

1. Press and hold the button (1) and (3) simultaneously.
2. The indicator (4) is turned continuously ON in orange for about 10 seconds.
3. Then the indicator (4) color changes to Green and flashes rapidly.

   Release the buttons once the green indicator flashes.
4. Now HomeLink button (1), (2) and (4) memories are all cleared.

NVS® is a registered trademark and Z-Nav™ is a trademark of the Gentex Corporation, Zeeland, Michigan. HomeLink® is a registered trademark owned by Johnson Controls, Incorporated, Milwaukee, Wisconsin.

FCC ID: NZLUAHL5A

IC: 4112A-UAHL5A

Information

This device complies with Part 15 of the FCC Rules.

Operation is subject to the following three conditions:

1. **This device may not cause harmful interference.**
2. **This device must accept any interference received, including interference that may cause undesired operation.**
3. **The transceiver has been tested and complies with FCC and Industry Canada rules. Changes or modifications not expressly approved by the party responsible for compliance could void the user's authority to operate the device.**

Two Way Communication Programing

1. Complete the HomeLink "Programming" first.
2. Before the first 10 times HomeLink button is pressed after the programming, the following steps MUST occur to program two way communication. (only for some older garage doors)

OOS047099N

3. Press and release the programed HomeLink button to activate the garage door.
4. Once the garage door is stopped, press and release the "Learn" or "Smart" button on the Garage door opener within 1 minute from the time of pressing the programed HomeLink button on mirror.

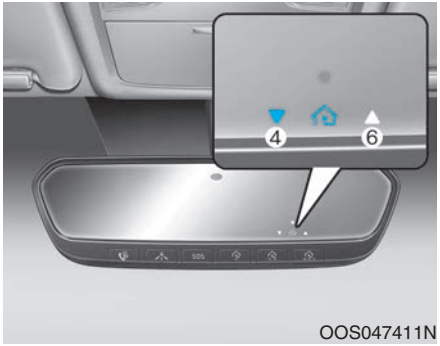

OOS047411N

5. If the both indicator (4) and (6) are flashing rapidly for about 5 seconds, the two way synchronization is completed.

Information

Some newer garage door openers provide two-way communication synchronizing when programming the original transmitter (OT).

Operating Two Way Communication

OOS047099N

1. Press and release (1), (2) or (3) button.

OOS047412N

2. The indicator (4) and (6) operates as below:
   - If the indicator (4) flashes in Orange, it indicates that the garage door is "closing".
   - If the indicator (4) is ON continuously in Green, it indicates that the garage door is "closed".
   - If the indicator (6) flashes in Orange, it indicates that the garage door is "Opening".
   - If the indicator (6) is ON continuously in Green, it indicates that the garage door is "Opened".
   - If the indicator (4) or (6) does not turn to Green, it indicates that the last status of garage door was not received properly. The HomeLink mirror tries to receive the last known status of the garage door for a few seconds.

Recalling Garage Door Status

Homelink mirror with two way communication provides a way to view the last stored message from the garage door opener. In order to recall the last known status of the last activated device, press the buttons "1 and 2" OR "2 and 3" simultaneously.

- If the indicator (4) is ON continuously in Green, it indicates that the last activated device was "closed" properly.
- If the indicator (6) is ON continuously in Green, it indicates that the last activated device was "open" properly.

Information

Two way communication range distance between "vehicle" and "garage door opener" is 100m.

The range may be reduced or increased a little due to obstacle conditions around the garage door opener, such as houses or trees.

Side View Mirrors

OOS047012

Make sure to adjust the side view mirrors to your desired position before you begin driving.

Your vehicle is equipped with both left-hand and right-hand side view mirrors. The mirrors can be adjusted remotely with the remote switch. The side view mirrors can be folded to help prevent damage when going through an automatic car wash or when passing through a narrow street.

The right side view mirror is convex. Objects seen in the mirror are closer than they appear.

Use the inside rear view mirror or look back directly to determine the actual distance of other vehicles prior to changing lanes.

⚠ WARNING

Do not adjust or fold the side view mirrors while driving. This may cause loss of vehicle control resulting in an accident.

NOTICE

- **Do not scrape ice off the mirror face; this may damage the surface of the glass.**
- **If the mirror is jammed with ice, do not adjust the mirror by force. Use an approved spray de-icer (not radiator antifreeze) spray, or a sponge or soft cloth with very warm water, or move the vehicle to a warm place and allow the ice to melt.**

Blind spot mirror (if equipped)

OOS047413N

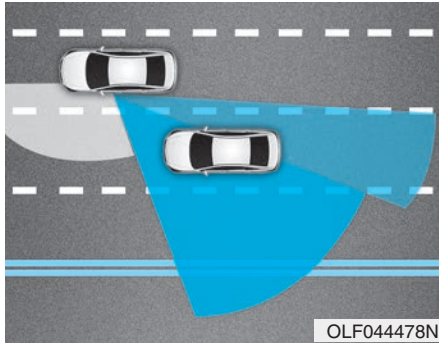
OLF044478N

The Blind Spot Mirror (BSM) is a supplemental mirror that minimizes the driver's blind spot zone by expanding the field of view on the rear side of the vehicle.

The blind spot mirror is equipped on the driver's left side view mirror.

⚠ WARNING

- **Always check the road condition while driving for unexpected situations even though the vehicle is equipped with a blind spot mirror.**
- **The blind spot mirror is intended as a supplemental device to assist the driver before changing lanes. Do not solely rely on the blind spot mirror as a precaution. Always pay attention to traffic conditions around you.**

NOTICE

Do not clean the mirror with harsh abrasives, fuel or other petroleum based cleaning products.

Side View Mirror Adjustment

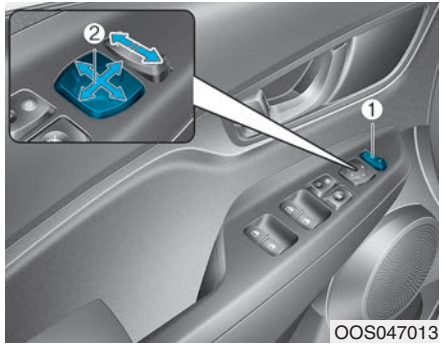

Adjusting the side view mirrors:

1. Press either the L (driver's side) or R (passenger's side) button (1) to select the side view mirror you would like to adjust.
2. Use the mirror adjustment control switch to position the selected mirror up, down, left or right.
3. After adjustment, put the button into neutral (center) position to prevent inadvertent adjustment.

NOTICE

- **The mirrors stop moving when they reach the maximum adjusting angles, but the motor continues to operate while the switch is pressed. Do not press the switch longer than necessary, because this can damage the motor.**
- **Do not attempt to adjust the side view mirrors by hand, because this can damage the motor.**

Folding the side view mirrors

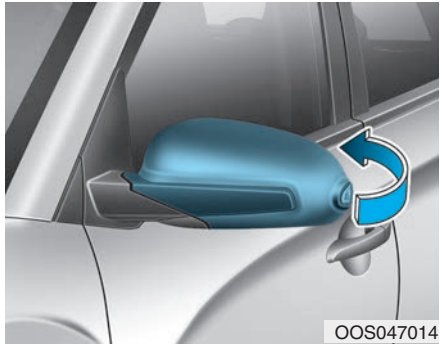

To fold the side view mirrors, grasp the housing of the mirror and then fold it inwards.

WINDOWS

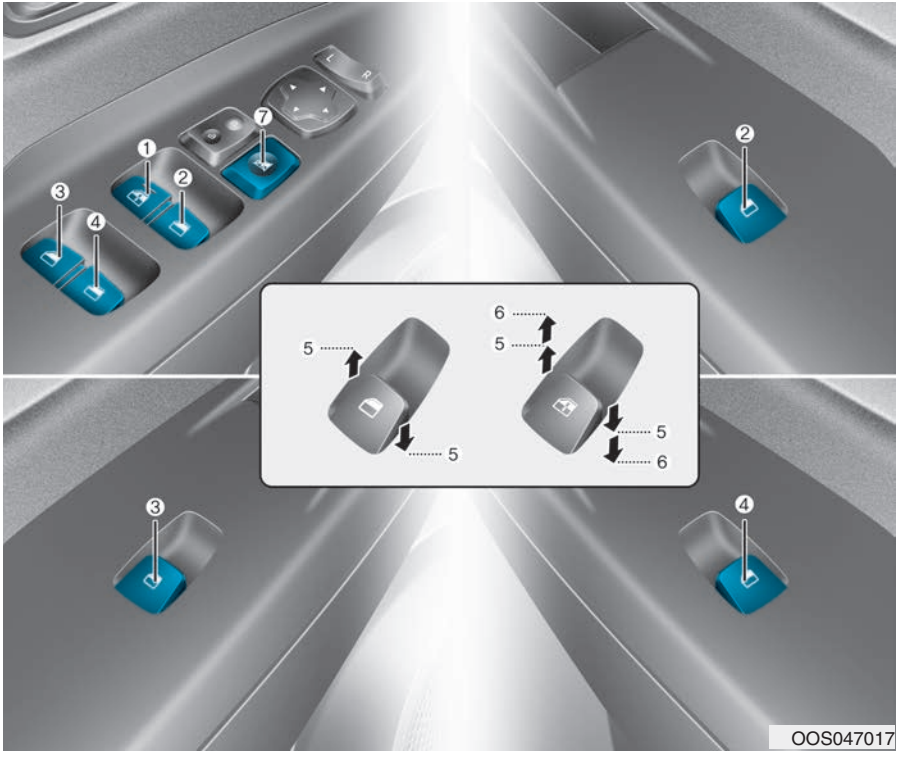

(1) Driver's door power window switch
(2) Front passenger's door power window switch
(3) Rear door (left) power window switch
(4) Rear door (right) power window switch
(5) Window opening and closing
(6) Automatic power window
(7) Power window lock switch

Power Windows

The ignition switch must be in the ON position to be able to raise or lower the windows. Each door has a Power Window switch to control that door's window. The driver has a Power Window Lock switch which can block the operation of passenger windows. The power windows will operate for approximately 30 seconds after the ignition switch is placed in the ACC or LOCK/OFF position. However, if the front doors are opened, the Power Windows will not operate even within the 30 second period.

⚠ WARNING

To avoid serious injury or death, do not extend your head, arms or body outside the windows while driving.

Information

- **In cold and wet climates, power windows may not work properly due to freezing conditions.**
- **While driving with the rear windows down or with the sunroof (if equipped) opened (or partially opened), your vehicle may demonstrate a wind buffeting or pulsation noise. This noise is normal and can be reduced or eliminated by taking the following actions. If the noise occurs with one or both of the rear windows down, partially lower both front windows approximately one inch. If you experience the noise with the sunroof open, slightly close the sunroof.**

Window opening and closing

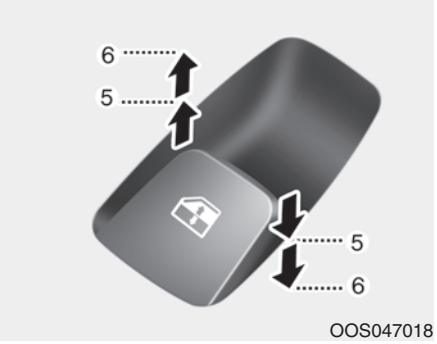

To open:

Press the window switch down to the first detent position (5). Release the switch when you want the window to stop.

To close:

Pull the window switch up to the first detent position (5). Release the window switch when you want the window to stop.

Auto down window (if equipped)

Pressing the power window switch down momentarily to the second detent position (6) completely lowers the window even when the switch is released. To stop the window at the desired position while the window is in operation, pull up or press down and release the switch.

Auto up/down window (if equipped)

Pressing or pulling up the power window switch momentarily to the second detent position (6) completely lowers or lifts the window even when the switch is released. To stop the window at the desired position while the window is in operation, pull up or press down and release the switch.

To reset the power windows

If the power windows do not operate normally, the automatic power window system must be reset as follows:

1. Place the ignition switch to the ON position.
2. Close the window and continue pulling up on the power window switch for at least one second.

If the power windows do not operate properly after resetting, have the system checked by an authorized HYUNDAI dealer.

⚠ WARNING

The automatic reverse feature doesn't activate while resetting the power window system. Make sure body parts or other objects are safely out of the way before closing the windows to avoid injuries or vehicle damage.

Automatic reverse (if equipped)

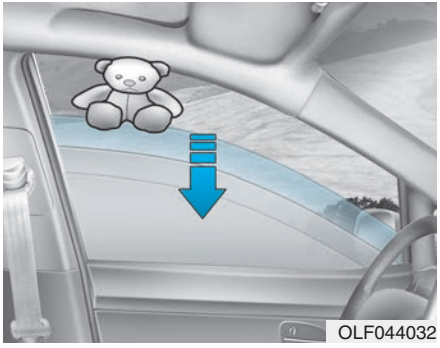

If a window senses any obstacle while it is closing automatically, it will stop and lower approximately 12 inches (30 cm) to allow the object to be cleared.

If the window detects the resistance while the power window switch is pulled up continuously, the window will stop upward movement then lower approximately 1 inch (2.5 cm).

If the power window switch is pulled up continuously again within 5 seconds after the window is lowered by the automatic window reverse feature, the automatic window reverse will not operate.

Information

The automatic reverse feature is only active when the "Auto Up" feature is used by fully pulling up the switch to the second detent.

WARNING

Make sure body parts or other objects are safely out of the way before closing the windows to avoid injuries or vehicle damage.

Objects less than 0.16 inch (4 mm) in diameter caught between the window glass and the upper window channel may not be detected by the automatic reverse window and the window will not stop and reverse direction.

NOTICE

Do not install any accessories on the windows. The automatic reverse feature may not operate.

Power window lock switch

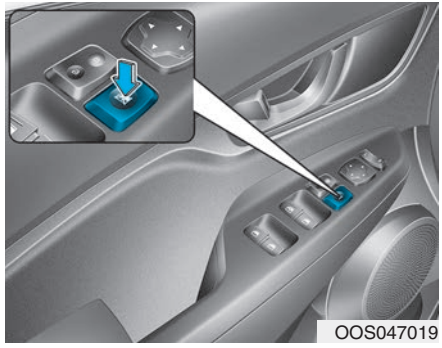
OOS047019

The driver can disable the power window switches on the rear passenger doors by pressing the power window lock switch.

When the power window lock switch is pressed:

- The rear passenger control will not be able to operate the rear passenger power window
- Note that the front passenger control is still able to operate the front passenger window, and that the driver master control can still operate all the power windows.

WARNING

Do not allow children to play with the power windows. Keep the driver's door power window lock switch in the LOCK position. Serious injury or death can result from unintentional window operation by a child.

NOTICE

- **To prevent possible damage to the power window system, do not open or close two windows or more at the same time. This will also ensure the longevity of the fuse.**
- **Never try to operate the main switch on the driver's door and the individual door window switch in opposite directions at the same time. If this is done, the window will stop and cannot be opened or closed.**

SUNROOF (IF EQUIPPED)

If your vehicle is equipped with a sunroof, you can slide or tilt your sunroof with the sunroof control switch located on the overhead console.

The sunroof can only be opened, closed, or tilted when the ignition switch is in the ON position.

Information

- **In cold and wet climates, the sunroof may not work properly due to freezing conditions.**
- **After the vehicle is washed or in a rainstorm, be sure to wipe off any water that is on the sunroof before operating it.**

⚠ WARNING

- **Never adjust the sunroof or sunshade while driving. This could result in loss of control and an accident that may cause death, serious injury, or property damage.**
- **Make sure heads, hands, arms or any other body parts or objects are out of the way before operating the sunroof.**
- **Do not extend your head, arms or body outside the sunroof while driving, to avoid serious injury.**
- **Do not leave the engine running and the key in your vehicle with unsupervised children. Unattended children could operate the sunroof, which could result in serious injury.**
- **Do not sit on the top of the vehicle. It may cause injury or vehicle damage.**

NOTICE

- **Do not continue to move the sunroof control lever after the sunroof is fully opened, closed, or tilted. Damage to the motor or system components could occur.**
- **Make sure the sunroof is closed fully when leaving your vehicle.**

  If the sunroof is left open, rain or snow may wet the interior of the vehicle. Also, leaving the sunroof open when the vehicle is unattended may invite theft.

Sunroof opening and closing

To open the sunroof:

Press the sunroof control lever backward to the first detent position. Release the switch when you want the sunroof to stop.

To close the sunroof:

Press the sunroof control lever forward to the first detent position. Release the switch when you want the sunroof to stop.

Sliding the sunroof

Pressing the sunroof control lever backward or forward momentarily to the second detent position completely opens or closes the sunroof even when the switch is released. To stop the sunroof at the desired position while the sunroof is in operation, press the sunroof control lever backward or forward and release the switch.

Information

To minimize wind noise while driving, it is recommended that you drive with the sunroof slightly closed (stop the sunroof about 2 inch (5 cm) before the maximum slide open position).

Tilting the sunroof

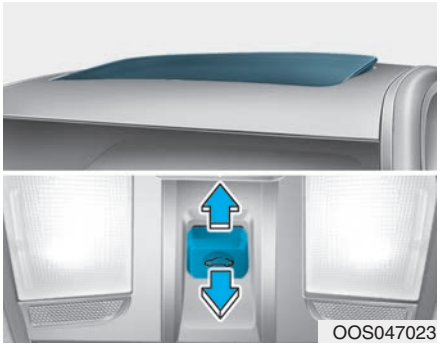

Tilt the sunroof open:

Push the sunroof control lever upward until the sunroof moves to the desired position.

To close the sunroof:

Push the sunroof control lever forward until the sunroof moves to the desired position.

NOTICE

- **Periodically remove any dirt that may accumulate on the sunroof guide rail or between the sunroof and roof panel which can make a noise.**
- **Do not try to open the sunroof when the temperature is below freezing or when the sunroof is covered with snow or ice, otherwise the motor could be damaged. In cold and wet climates, the sunroof may not work properly.**

Sunshade

The sunshade can be opened and closed manually. However, the sunshade will open automatically with the sunroof glass when both the sunroof and sunshade are closed and the sunroof control lever is operated.

NOTICE

Do not leave the sunshade closed while the sunroof is open.

Resetting the sunroof

In some circumstances resetting the sunroof operation may need to be performed. Some instances where resetting the sunroof may be required include:

- When the 12V battery in the engine room is either disconnected or discharged
- When the 12V battery fuse is replaced

If the sunroof one-touch AUTO OPEN/CLOSE operation is not functioning properly

Sunroof resetting procedure:

1. It is recommended to perform the reset procedure with the vehicle engine running. Start the vehicle in PARK (P) by pressing the Start/Stop button.
2. Make sure the sunroof is in the fully closed position. If the sunroof is open, push the control lever forward until the sunroof is fully closed.
3. Release the control lever when the sunroof is fully closed.

4. Push the control lever forward about 10 seconds.
   - When the sunroof is in the closed position :

     The glass will tilt and slightly move up and down.
   - When the sunroof is in the tilt position:

     The glass will slightly move up and down.

Do not release the lever until the operation is completed.

If you release the lever during operation, start the procedure again from step 2.

5. Within 3 seconds, push and hold the control lever forward until the sunroof operates as follows:

   Tilt down → Slide Open → Slide Close.

Do not release the lever until the operation is completed.

If you release the lever during operation, start the procedure again from step 2.

6. Release the sunroof control lever after all steps have completed. (The sunroof system has been reset.)

Information

- **If the sunroof is not reset when the vehicle battery is disconnected or discharged, or the sunroof fuse is blown, the sunroof may not operate normally.**
- **For more detailed information, contact an authorized HYUNDAI dealer.**

Sunroof Open Warning (if equipped)

- If the driver turns off the engine when the sunroof is not fully closed, the warning chime will sound for approximately 3 seconds and the sunroof open warning will appear on the LCD display.
- If the driver turns off the engine and opens the door when the sunroof is not fully closed, the open sunroof warning will appear on the LCD display until the door is closed or the sunroof is fully closed.

Close the sunroof securely when leaving your vehicle.

EXTERIOR FEATURES

Hood

Opening the hood

1. Park the vehicle and set the parking brake.
2. Pull the release lever to unlatch the hood. The hood should pop open slightly.

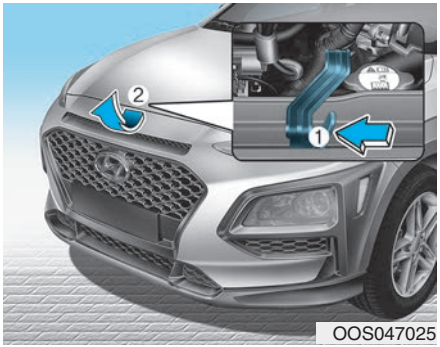

3. Go to the front of the vehicle, raise the hood slightly, push up the secondary latch (1) inside of the hood center and lift the hood (2).

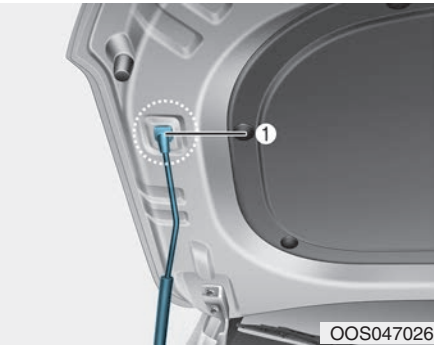

4. Pull out the support rod and hold the hood open with the support rod (1).

⚠ WARNING

- **When handling the support rod, grasp the rod in the area wrapped with rubber only. In some cases where the engine has been running the support rod may be hot. Caution should be taken to avoid getting burned by the support rod.**

- **The support rod must be inserted completely into the hole provided whenever you inspect the engine compartment. This will prevent the hood from becoming dislodged and falling and causing potential injury.**

Closing the hood

1. Before closing the hood, check in and around the engine compartment to ensure the following:
   - Any tools or other loose objects are removed from the engine room area or hood opening area
   - All glove, rags, or other combustible material is removed from the engine compartment
   - All filler caps are tightly and correctly installed
2. Lower the hood halfway (lifted approximately 12 inches (30 cm) from the closed position) and push down to securely lock in place. Then double check to be sure the hood is secure. If the hood can be raised slightly, it is not securely locked. Open it again and close it with more force.

⚠ WARNING

- **Before closing the hood, ensure all obstructions are removed from around the hood opening.**
- **Always double check to be sure that the hood is firmly latched before driving away. Check there is no hood open warning light or message displayed on the instrument cluster. Driving with the hood opened may cause a total loss of visibility, which might result in an accident.**
- **Do not move the vehicle with the hood in the raised position, as vision is obstructed, which might result in an accident, and the hood could fall or be damaged.**

Liftgate

Opening the liftgate

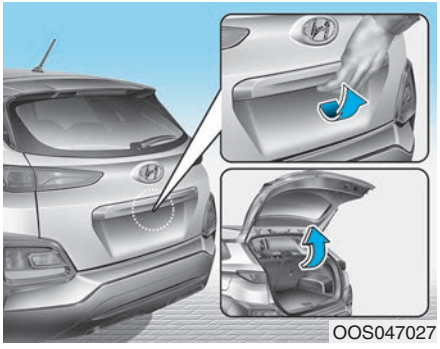
OOS047027

Before attempting to open the liftgate, make sure the vehicle is in PARK (P). To open the liftgate, perform the following:

1) Unlock the vehicle using either the remote key fob (Key Start vehicles), the Smart Key (Push Button Start vehicles), or the Unlock button on the driver side armrest.
2) From outside the vehicle, press the liftgate handle

Closing the liftgate

Lower the liftgate lid and press down until it locks. To be sure the liftgate lid is securely fastened, always check by trying to pull it up again without pressing the liftgate handle button.

Information

In cold and wet climates, door lock and door mechanisms may not work properly due to freezing conditions.

WARNING

The liftgate swings upward. Make sure no objects or people are near the rear of the vehicle when opening the liftgate.

NOTICE

Make certain that you close the liftgate before driving your vehicle. Possible damage may occur to the liftgate struts and mounting hinges if the liftgate is not closed prior to driving.

WARNING

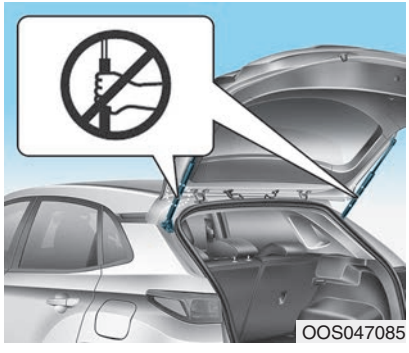

Do not hold on to or try to pull on the liftgate strut. Be aware that the deformation of the liftgate strut may cause vehicle damage and risk of injury.

Emergency liftgate safety release

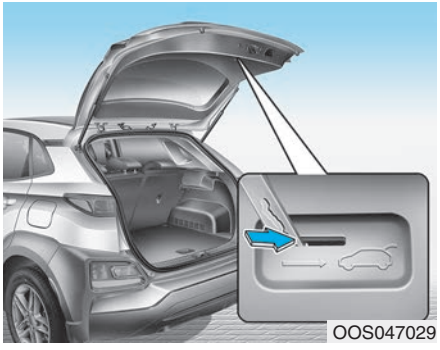

Your vehicle is equipped with an emergency liftgate safety release lever located on the bottom of the liftgate inside the vehicle.

To unlock and open the liftgate manually from inside the luggage compartment, perform the following steps:

1. Insert the mechanical key from the key fob or a small screwdriver into the slot at the bottom of the liftgate inside the luggage compartment.

2. Slide the key or screwdriver to the right to engage the safety release lever.
3. Push the liftgate outward and upward.

⚠ WARNING

- **Be aware of the location of the emergency liftgate safety release lever in your vehicle and know how to open the liftgate using the safety release lever.**
- **No one should be allowed to occupy the luggage compartment of the vehicle at any time. The luggage compartment is a very dangerous location in the event of a crash.**
- **Use the release lever for emergencies only. Use extreme caution, especially while the vehicle is in motion.**

Fuel Filler Door

Opening the fuel filler door

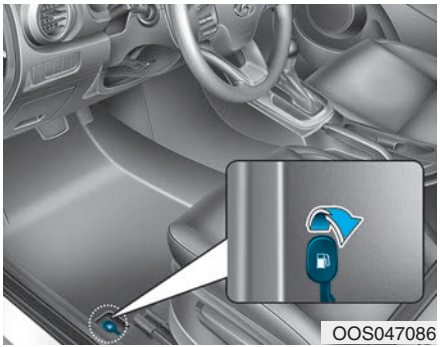

The fuel filler door is opened from inside the vehicle using the fuel filler door release lever.

1. Turn the engine off. Locate the fuel filler door release lever on the floor on the left side of the driver seat.
2. Pull up on the release lever.

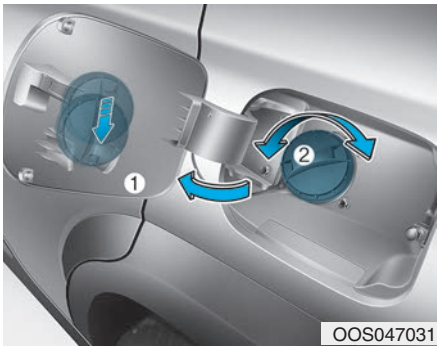

3. Pull the fuel filler door (1) outward to access the fuel tank cap.
4. To remove the fuel tank cap (2), turn it counterclockwise. You may hear a hissing noise as the pressure inside the tank equalizes.
5. Place the cap on the fuel filler door.

ℹ Information

If the fuel filler door does not open because ice has formed around it, tap lightly or push on the door to break the ice and release the door. Do not pry on the door. If necessary, spray around the door with an approved deicer fluid (do not use radiator antifreeze) or move the vehicle to a warm place and allow the ice to melt.

Closing the fuel filler door

1. To install the fuel tank cap, turn it clockwise until it "clicks" one time.
2. Close the fuel filler door until it is latched securely.

⚠ WARNING

Gasoline is highly flammable and explosive. Failure to follow these guidelines may result in SERIOUS INJURY or DEATH:

- **Read and follow all warnings posted at the gas station.**
- **Before refueling, note the location of the Emergency Gasoline Shut-Off, if available, at the gas station.**
- **Before touching the fuel nozzle, you should eliminate the potential build-up of static electricity by touching a metal part of the vehicle, a safe distance away from the fuel filler neck, nozzle, or other gas source, with your bare hand.**
- **Do not use cellular phones while refueling. Electric current and/or electronic interference from cellular phones can potentially ignite fuel vapors and cause a fire.**
- **Do not get back into a vehicle once you have begun refueling. You can generate a build-up of static electricity by touching, rubbing or sliding against any item or fabric capable of producing static electricity. Static electricity discharge can ignite fuel vapors causing a fire. If you must re-enter the vehicle, you should once again eliminate potentially dangerous static electricity discharge by touching a metal part of the vehicle, away from the fuel filler neck, nozzle or other gasoline source, with your bare hand.**
- **When using an approved portable fuel container, be sure to place the container on the ground prior to refueling. Static electricity discharge from the container can ignite fuel vapors causing a fire.**

Once refueling has begun, contact between your bare hand and the vehicle should be maintained until the filling is complete.

- Use only approved portable plastic fuel containers designed to carry and store gasoline.
- When refueling, always move the shift lever to the P (Park) position (for automatic transmission/dual clutch transmission), set the parking brake, and place the ignition switch to the LOCK/OFF position. Sparks produced by electrical components related to the engine can ignite fuel vapors causing a fire.
- Do not use matches or a lighter and do not smoke or leave a lit cigarette in your vehicle while at a gas station, especially during refueling.

- Do not over-fill or top-off your vehicle tank, which can cause gasoline spillage.
- If a fire breaks out during refueling, leave the vicinity of the vehicle, and immediately contact the manager of the gas station and then contact the local fire department. Follow any safety instructions they provide.
- If pressurized fuel sprays out, it can cover your clothes or skin and thus subject you to the risk of fire and burns. Always remove the fuel cap carefully and slowly. If the cap is venting fuel or if you hear a hissing sound, wait until the condition stops before completely removing the cap.
- Always check that the fuel cap is installed securely to prevent fuel spillage in the event of an accident.

Information

Make sure to refuel your vehicle according to the "Fuel Requirements" suggested in the Introduction chapter.

NOTICE

- Do not spill fuel on the exterior surfaces of the vehicle. Any type of fuel spilled on painted surfaces may damage the paint.
- If the fuel filler cap requires replacement, use only a genuine HYUNDAI cap or the equivalent specified for your vehicle. An incorrect fuel filler cap can result in a serious malfunction of the fuel system or emission control system.

INSTRUMENT CLUSTER

■ Type A

■ Type B

1. Tachometer
2. Speedometer
3. Engine coolant temperature gauge
4. Fuel gauge
5. Warning and indicator lights
6. LCD display (including Trip computer)

The actual cluster in the vehicle may differ from the illustration.
For more information, refer to the "Gauges and Meters" in this chapter.

OOS047101N/OOS047102N

Instrument Cluster Control

Adjusting instrument cluster illumination

When the vehicle's position lights or headlights are on, press the illumination control button to adjust the brightness of the instrument panel illumination.

When pressing the illumination control button, the interior switch illumination intensity is also adjusted.

⚠ WARNING

Never adjust the instrument cluster while driving. Doing so could lead to driver distraction which may cause an accident and lead to vehicle damage, serious injury, or death.

- The brightness of the instrument panel illumination is displayed.
- If the brightness reaches the maximum or minimum level, a chime will sound.

For information regarding the illumination setting on your audio display, refer to the "Setup" section of your Audio or Navigation manual.

Gauges and Meters

Speedometer

OOS047103N

The speedometer indicates the speed of the vehicle and is calibrated in miles per hour (MPH) and/or kilometers per hour (km/h).

Tachometer

OOS047104L

The tachometer indicates the approximate number of engine revolutions per minute (rpm).

Use the tachometer to select the correct shift points and to prevent lugging and/or over-revving the engine.

NOTICE

Do not operate the engine within the tachometer's RED ZONE. This may cause severe engine damage.

Engine coolant temperature gauge

OOS047140L

This gauge indicates the temperature of the engine coolant when the ignition switch is in the ON position.

NOTICE

If the gauge pointer moves beyond the normal range area toward the "H" position, it indicates overheating that may damage the engine.

Do not continue driving with an overheated engine. If your vehicle overheats, refer to "If the Engine Overheats" in chapter 6.

⚠ WARNING

Never remove the radiator cap or reservoir cap when the engine is hot. The engine coolant is under pressure and could severely burn. Wait until the engine is cool before adding coolant to the reservoir.

Fuel gauge

This gauge indicates the approximate amount of fuel remaining in the fuel tank.

Information

- **The fuel tank capacity is given in chapter 8.**
- **The fuel gauge is supplemented by a low fuel warning light, which will illuminate when the fuel tank is nearly empty.**
- **On inclines or curves, the fuel gauge pointer may fluctuate or the low fuel warning light may come on earlier than usual due to the movement of fuel in the tank.**

⚠ WARNING

Running out of fuel can expose vehicle occupants to danger.

You must stop and obtain additional fuel as soon as possible after the warning light comes on or when the gauge indicator comes close to the "E (Empty)" level.

NOTICE

Avoid driving with an extremely low fuel level. Running out of fuel could cause the engine to misfire damaging the catalytic converter.

Outside temperature gauge

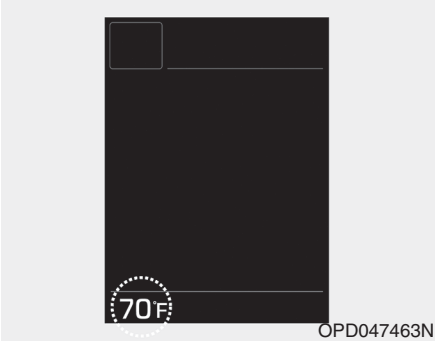

OPD047463N

This gauge indicates the current outside air temperature by 1°F (1°C).

- Temperature range : -40°F ~ 140°F (-40°C ~ 60°C)

Note that the temperature indicated on the LCD display may not change as quickly as the outside temperature (there may be a slight delay before the temperature changes.)

You can change the temperature unit from °F to °C or °C to °F in the User Settings mode in the cluster:

- Go to User Settings Mode → Other → Temperature Unit.

For vehicles equipped with Automatic Climate Control, you can also:

- Press and hold the AUTO and OFF buttons on the climate control unit for 3 seconds

Both the temperature unit on the cluster LCD display and climate control screen will change.

Odometer

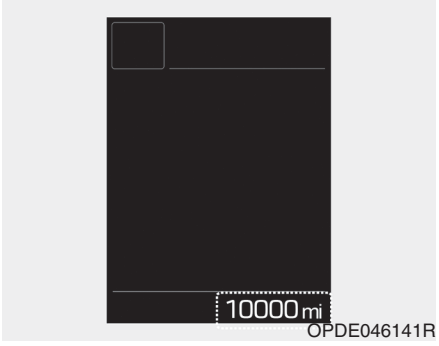

OPDE046141R

The odometer indicates the total distance that the vehicle has been driven and should be used to determine when periodic maintenance should be performed.

Range

OPDE046138R

- The range is the estimated distance the vehicle can be driven with the remaining fuel.
- If the estimated distance is below 1 mi. (1 km), the trip computer will display "----" as range.

Information

- **If the vehicle is not on level ground or the battery power has been interrupted, the range function may not operate correctly.**
- **The range may differ from the actual driving distance as it is only an estimate of the available driving range for the vehicle and driving conditions.**
- **The trip computer may not register additional fuel if less than 1.6 gallon (6 liters) of fuel are added to the vehicle.**
- **The range may vary significantly based on driving conditions, driving habits, and condition of the vehicle.**

Transmission shift indicator

Automatic transmission/ Dual clutch transmission shift indicator

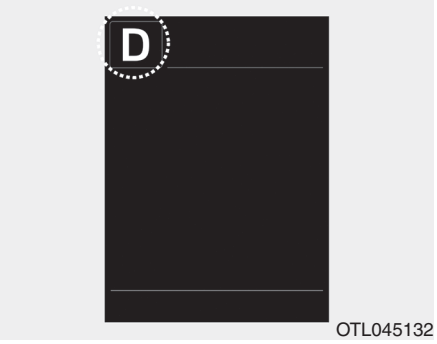

OTL045132

This indicator displays the gear position of the shift lever.

- Park : P
- Reverse : R
- Neutral : N
- Drive : D
- Sport Mode
  - Auto Transmission : 1, 2, 3, 4, 5, 6
  - Dual Clutch Transmission : 1, 2, 3, 4, 5, 6, 7

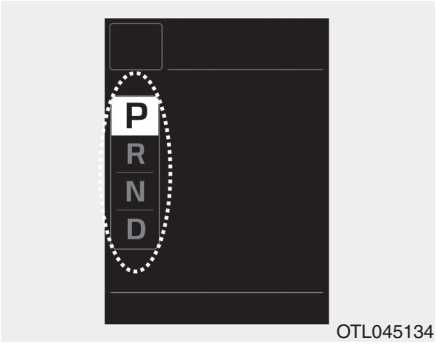

Shift indicator pop-up

The pop-up indicates the current gear position displayed in the cluster for about 2 seconds when shifting into other positions (P/R/N/D).

Warning and Indicator Lights

Information

Make sure that all warning lights are OFF after starting the engine. If any light is still ON, this indicates a situation that needs attention.

Air Bag Warning Light

This warning light illuminates:

- When you place the ignition switch to the ON position.
  - The air bag warning light illuminates for about 6 seconds and then turns off when all checks have been performed
- The air bag warning light will remain illuminated if there is a malfunction with the Safety Restraint System (SRS) air bag operation.

  In this case, have the vehicle inspected by an authorized HYUNDAI dealer.

Seat Belt Warning Light

This warning light informs the driver that the seat belt is not fastened.

For more information, refer to "Seat Belts" in chapter 2.

Parking Brake & Brake Fluid Warning Light

This warning light illuminates:

- When you place the ignition switch to the ON position.
  - The parking brake light illuminates for about 3 seconds and will then turn off once the parking brake is released.
- Whenever the parking brake is applied.
- Whenever the brake fluid level in the reservoir is low.
  - If the warning light illuminates with the parking brake released, it indicates the brake fluid level in the reservoir is low.

If the brake fluid level in the reservoir is low:

1. Drive carefully to the nearest safe location and stop your vehicle.
2. With the engine stopped, check the brake fluid level immediately and add fluid as required **(For more information, refer to "Brake Fluid" in chapter 7)**. After adding brake fluid, check all brake components for fluid leaks. If a brake fluid leak is found, or if the warning light remains on, or if the brakes do not operate properly, do not drive the vehicle. Have the vehicle inspected by an authorized HYUNDAI dealer.

Dual-diagonal braking system

Your vehicle is equipped with dual-diagonal braking systems. This means you still have braking on two wheels even if one of the dual systems should fail.

With only one of the dual systems working, more than normal pedal travel and greater pedal pressure is required to stop the vehicle.

Also, the vehicle will not stop in as short a distance with only a portion of the brake system working.

If the brakes fail while you are driving, shift to a lower gear for additional engine braking and stop the vehicle as soon as it is safe to do so.

⚠ WARNING

Parking Brake & Brake Fluid Warning Light

Driving the vehicle with a warning light ON is dangerous. If the Parking Brake & Brake Fluid Warning Light illuminates with the parking brake released, it indicates that the brake fluid level is low.

In this case, have the vehicle inspected by an authorized HYUNDAI dealer.

Anti-lock Brake System (ABS) Warning Light

This warning light illuminates:

- When you place the ignition switch to the ON position.
  - The ABS warning light illuminates for about 3 seconds and then turns off.
- Whenever there is a malfunction with the ABS.

  Note that the hydraulic braking system will still be operational even if there is a malfunction with the ABS.

Electronic Brake Force Distribution (EBD) System Warning Light

These two warning lights illuminate at the same time while driving:

- When the ABS and regular brake system may not work normally.

  In this case, have the vehicle inspected by an authorized HYUNDAI dealer.

⚠ WARNING

Electronic Brake Force Distribution (EBD) System Warning Light

When both ABS and Parking Brake & Brake Fluid Warning Lights are on, the brake system will not work normally and you may experience an unexpected and dangerous situation during sudden braking.

In this case, avoid high speed driving and abrupt braking.

Have the vehicle inspected by an authorized HYUNDAI dealer as soon as possible.

Information - Electronic Brake Force Distribution (EBD) System Warning Light

When the ABS Warning Light is on or both ABS and Parking Brake & Brake Fluid Warning Lights are on, the speedometer, odometer, or tripmeter may not work. Also, the EPS Warning Light may illuminate and the steering effort may increase or decrease.

In this case, have the vehicle inspected by an authorized HYUNDAI dealer as soon as possible.

Electric Power Steering (EPS) Warning Light

This warning light illuminates:

- When you place the ignition switch to the ON position.
  - The Electric Power Steering Warning light illuminates for about 3 seconds and then goes off.
- Whenever there is a malfunction with the EPS.

  If this occurs, have the vehicle inspected by an authorized HYUNDAI dealer.

Malfunction Indicator Lamp (MIL)

This indicator light illuminates:

- When you place the ignition switch to the ON position.
  - The malfunction indicator light illuminates for about 3 seconds and then goes off.
- Whenever there is a malfunction with either the emission control system or the engine or the vehicle powertrain.

  If this occurs, have the vehicle inspected by an authorized HYUNDAI dealer.

NOTICE

Driving with the Malfunction Indicator Lamp (MIL) on may cause damage to the emission control system which could affect drivability and/or fuel economy.

NOTICE

If the Malfunction Indicator Lamp (MIL) illuminates, potential catalytic converter damage is possible which could result in loss of engine power.

In this case, have the vehicle inspected by an authorized HYUNDAI dealer as soon as possible.

Charging System Warning Light

When this warning light illuminates while the engine is running, the battery is not being charged. Immediately turn OFF all electrical accessories. Try not to use electrically operated controls, such as the power windows. Keep the engine running.

Have the vehicle inspected by an authorized HYUNDAI dealer as soon as possible.

Engine Oil Pressure Warning Light

This warning light illuminates:

- When the engine oil pressure is low.

If the engine oil pressure is low:

1. Drive carefully to the nearest safe location and stop your vehicle.
2. Turn the engine off and check the engine oil level **(For more information, refer to "Engine Oil" in chapter 7)**. If the level is low, add oil as required.

   If the warning light remains on after adding oil or if oil is not available, have the vehicle inspected by an authorized HYUNDAI dealer as soon as possible.

NOTICE

- **If the engine does not stop immediately after the Engine Oil Pressure Warning Light is illuminated, severe damage could result.**
- **If the warning light stays on while the engine is running, it indicates that there may be serious engine damage or malfunction. In this case:**
  1. **Stop the vehicle as soon as it is safe to do so.**
  2. **Turn off the engine and check the oil level. If the oil level is low, fill the engine oil to the proper level.**
  3. **Start the engine again. If the warning light stays on after the engine is started, turn the engine off immediately. In this case, have the vehicle inspected by an authorized HYUNDAI dealer.**

Low Fuel Level Warning Light

This warning light illuminates:

- When the fuel tank is nearly empty. Add fuel as soon as possible.

NOTICE

Driving with the Low Fuel Level warning light on or with the fuel level below "E" can cause the engine to misfire and damage the catalytic converter.

Washer Fluid Warning Light

This warning light illuminates:

- When the washer fluid level in the reservoir is nearly empty.

  If washer fluid warning light illuminates, refill the washer fluid reservoir in the engine room when possible.

Master Warning Light

This warning light illuminates:

- When there is a malfunction in operation in any of the following systems:
  - Low washer fluid
  - Exterior lamp malfunction (if equipped)
  - Blind-Spot Collision Warning (BCW) malfunction (if equipped)
  - Tire Pressure Monitoring System (TPMS)

  To identify the details of the warning, look at the LCD display.

Low Tire Pressure Warning Light (if equipped)

This warning light illuminates:

- When you place the ignition switch ON position.
  - It illuminates for approximately 3 seconds and then goes off.
- When one or more of your tires are significantly underinflated. (The location of the underinflated tires are displayed on the LCD display.)

For more information, refer to "Tire Pressure Monitoring System (TPMS)" in chapter 6.

This warning light remains ON after blinking for approximately 60 seconds, or repeatedly blinks ON and OFF in 3 second intervals:

- When there is a malfunction with the TPMS.

  In this case, have the vehicle inspected by an authorized HYUNDAI dealer as soon as possible.

For more information, refer to "Tire Pressure Monitoring System (TPMS)" in chapter 6.

⚠ WARNING

Safe Stopping

- **The TPMS cannot alert you to severe and sudden tire damage caused by external factors.**
- **If you notice any vehicle instability, immediately take your foot off the accelerator pedal, apply the brakes gradually with light force, and slowly move to a safe position off the road.**

All Wheel Drive (AWD) Warning Light (if equipped)

This warning light illuminates:

- When you place the ignition switch to the ON position.
  - The All Wheel Drive warning light illuminates for about 3 seconds and then goes off.
- Whenever there is a malfunction with the AWD system.

  If this occurs, have your vehicle inspected by an authorized HYUNDAI dealer.

Electronic Stability Control (ESC) Indicator Light

This indicator light illuminates:

- When you place the ignition switch to the ON position.
  - The Electronic Stability Control indicator light illuminates for about 3 seconds and then goes off.
- Whenever there is a malfunction with the ESC system.

  If this occurs, have the vehicle inspected by an authorized HYUNDAI dealer.

This indicator light blinks:

- While the ESC is operating.

For more information, refer to "Electronic Stability Control (ESC)" in chapter 5.

Electronic Stability Control (ESC) OFF Indicator Light

This indicator light illuminates:

- When you place the ignition switch to the ON position.
  - It illuminates for approximately 3 seconds and then goes off.
- When you deactivate the ESC system by pressing the ESC OFF button.

For more information, refer to "Electronic Stability Control (ESC)" in chapter 5.

Immobilizer Indicator Light (with smart key (if equipped)

This indicator light illuminates for up to 30 seconds:

- When the vehicle detects the smart key in the vehicle with the Engine Start/Stop button in the ACC or ON position.
  - Once the smart key is detected, you can start the engine.
  - The indicator light goes off after starting the engine.

This indicator light blinks for a few seconds:

- When the smart key is not in the vehicle.
  - If the smart key is not detected, you cannot start the engine.

This indicator light illuminates for 2 seconds and goes off:

- If the smart key is in the vehicle and the Engine Start/Stop button is ON, but the vehicle cannot detect the smart key.

  In this case, have the vehicle inspected by an authorized HYUNDAI dealer.

This indicator light blinks:

- When the battery voltage of the smart key is low.
  - If this occurs, you will not be able to start the engine by simply pressing the Start/Stop button. However, you can still start the engine by pressing the Start/Stop button directly with the smart key. **(Refer to "Starting the Engine" in chapter 5.)**
- When there is a malfunction with the immobilizer system.

  In this case, have the vehicle inspected by an authorized HYUNDAI dealer.

Turn Signal Indicator Light

This indicator light blinks:

- When you operate the turn signal indicator stalk.

If any of the following occur, there may be a malfunction with the turn signal system.

- The turn signal indicator light illuminates but does not blink
- The turn signal indicator light blinks rapidly
- The turn signal indicator light does not illuminate at all

If any of these conditions occur, have your vehicle inspected by an authorized HYUNDAI dealer.

High Beam Indicator Light

This indicator light illuminates:

- When the headlights are on and in the high beam position
- When the turn signal lever is pulled into the Flash-to-Pass position.

Light ON Indicator Light

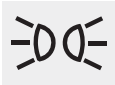

This indicator light illuminates:

- When the tail lights or headlights are on.

Front Fog Indicator Light (if equipped)

This indicator light illuminates:

- When the front fog lights are on.

LED Headlight Warning Light (if equipped)

This warning light illuminates:

- When you place the ignition switch or the Engine Start/Stop button to the ON position.
- When there is a malfunction with the LED headlight.

  If this occurs, have the vehicle inspected by an authorized HYUNDAI dealer.

This warning light blinks:

When there is a malfunction with a LED headlight related part.

In this case, have the vehicle inspected by an authorized HYUNDAI dealer.

NOTICE

Continuous driving with the LED Headlight Warning Light on or blinking can reduce LED headlight life.

High Beam Assist (HBA) indicator light (if equipped)

This indicator light illuminates :

- When the high-Beam is on with the light switch in the AUTO light position.
- If your vehicle detects oncoming or preceding vehicles, the High Beam Assist (HBA) system will switch the high beam to low beam automatically.

For more information, refer to "High Beam Assist (HBA) system" in this chapter.

Icy Road Warning Light (if equipped)

This warning light is to warn the driver the road may be icy.

When the outside temperature gauge reads below 40°F (4°C), the Icy Road Warning Light and Outside Temperature Gauge blinks and then illuminates. Also, the warning chime sounds 1 time.

Information

If the icy road warning light illuminates while driving, it means that the outside temperature has reduced and that the road conditions may be icy. As a precaution you should reduce your speed and drive more carefully and with greater attention to the road conditions.

Cruise Indicator Light

This indicator light illuminates:

- When the cruise control system is enabled.

For more information, refer to "Cruise Control System" in chapter 5.

Cruise SET Indicator Light

This indicator light illuminates:

- When the cruise control speed is set.

For more information, refer to "Cruise Control System" in chapter 5.

SPORT Mode Indicator Light

This indicator light illuminates:

- When you select "SPORT" mode as drive mode.

For more information, refer to "Drive Mode Integrated Control System" in chapter 5.

ECO Mode Indicator Light (for Canada)

This indicator light illuminates :

- When you select "ECO" mode as drive mode.

For more information, refer to "Drive Mode Integrated Control System" in chapter 5.

Forward Collision Avoidance Assist Warning Light (if equipped)

This warning light illuminates :

- When you set the ignition switch or Engine Start/Stop button to the ON position.
  - It illuminates for approximately 3 seconds and then goes off.
- When there is a malfunction with FCA. In this case, have your vehicle inspected by an authorized dealer of HYUNDAI.

For more information, refer to "Forward Collision-Avoidance Assist (FCA) system" in chapter 5.

Lane Keep Assist Indicator Light (if equipped)

This indicator light illuminates:

- [Green] When you activate the lane departure warning system by pressing the LKA button and all of the system operating conditions are satisfied.
- [White] When system operating conditions are not satisfied or when the sensor does not detect the lane line.
- [Yellow] When there is a malfunction with the lane keeping assist system.

In this case, have your vehicle inspected by an authorized HYUNDAI dealer.

For more information, refer to "Lane Keeping Assist (LKA) system" in chapter 5.

All Wheel Drive LOCK Indicator Light (if equipped)

This indicator light illuminates:

- When you place the ignition switch to the ON position.
  - The AWD LOCK indicator light illuminates for about 3 seconds and then goes off.
- When you select AWD Lock mode by pressing the AWD LOCK button.
  - The AWD LOCK mode is to transfer a portion of the drive torque to the rear wheels for increased traction on wet pavement, snow covered roads or when driving off road.

⚠ CAUTION

AWD Lock Mode

Do not use the AWD lock mode on dry paved roads. Doing so can cause abnormal noise or vibration, and may damage the AWD system.

Downhill Brake Control (DBC) Indicator Light

This indicator light illuminates:

- When you place the ignition switch to the ON position.
  - The Downhill Brake Control Indicator Light illuminates for about 3 seconds and then goes off.
- When you activate the system by pressing the DBC button.

This indicator light blinks:

- When the DBC is operating.

This indicator light illuminates yellow:

- When there is a malfunction with the DBC system.

If this occurs, have your vehicle inspected by an authorized HYUNDAI dealer.

For more information, refer to "Downhill Brake Control (DBC) System" in chapter 5.

LCD Display Messages

Shift to P or N to start engine (for smart key system)

This warning message is displayed if you try to start the engine with the shift lever not in the P (Park) or N (Neutral) position.

Information

You can start the engine with the shift lever in the N (Neutral) position. But, for your safety, we recommend that you start the engine with the shift lever in the P (Park) position.

Shift to P (for smart key system)

This message is displayed if you try to turn off the engine without the shift lever in P (Park) position.

If this occurs, the Engine Start/Stop button turns to the ACC position (If you press the Engine Start/Stop button once more, it will turn to the ON position).

Low key battery (for smart key system)

This warning message is displayed if the battery of the smart key is discharged while changing the Engine Start/Stop button to the OFF position.

Press brake pedal to start engine (for smart key system)

This warning message is displayed if the Engine Start/Stop button changes to the ACC position twice by pressing the button repeatedly without depressing the brake pedal.

You can start the vehicle by depressing the brake pedal and then pressing the Engine Start/Stop button.

Key not in vehicle (for smart key system)

This warning message is displayed if the smart key is not in the vehicle when you press the Engine Start/Stop button.

When attempting to start the vehicle, always have the smart key with you.

Key not detected (for smart key system)

This warning message is displayed if the smart key is not detected when you press the Engine Start/Stop button.

Press START button again (for smart key system)

This message is displayed if you were unable to start the vehicle when the Engine Start/Stop button was pressed.

If this occurs, attempt to start the engine by pressing the Engine Start/Stop button again.

If the warning message appears each time you press the Engine Start/Stop button, have your vehicle inspected by an authorized HYUNDAI dealer.

Battery discharging due to external electrical devices (if equipped)

This message is displayed if the battery voltage is weak due to any non-factory electrical accessories (ex. dashboard camera) while parking. Be careful that the battery is not discharged.

If the warning message appears after removing the non-factory electrical accessories, we recommend that you have the vehicle inspected by an authorized HYUNDAI dealer.

Press START button with key (for smart key system)

This warning message is displayed if you press the Engine Start/Stop button while the warning message "Key not detected" is displayed.

At this time, the immobilizer indicator light blinks.

Check BRAKE SWITCH fuse (for smart key system)

This warning message is displayed if the brake switch fuse is disconnected.

You need to replace the fuse with a new one before starting the engine.

If that is not possible, you can start the engine by pressing the Engine Start/Stop button for 10 seconds in the ACC position.

Door, Hood, Liftgate Open Indicator

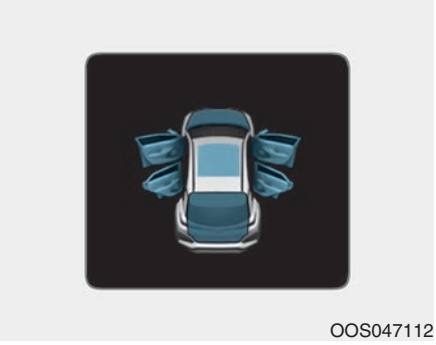

This warning is displayed if any door or the hood or the liftgate is left open. The warning will indicate which door is open in the display.

⚠ CAUTION

Before driving the vehicle, you should confirm that the door/hood/liftgate is fully closed. Also, check there is no door/hood/liftgate open warning light or message displayed on the instrument cluster.

Sunroof Open (if equipped)

OOS047113

This warning is displayed if you turn off the engine when the sunroof is open.

Close the sunroof securely before leaving your vehicle.

Low Pressure

OOS047115L

This warning message is displayed if the tire pressure is low. The corresponding tire on the vehicle will be illuminated.

For more information, refer to "Tire Pressure Monitoring System (TPMS)" in chapter 6.

Turn FUSE SWITCH on

OOS047142L

This warning message is displayed if the fuse switch located on the fuse box under the steering wheel is OFF.

The fuse switch is turned OFF to minimize battery draw when the vehicle is in storage or in transportation where the vehicle will not be operated for some time.

Under normal conditions, the fuse switch should be set to the ON position.

For more information, refer to "Fuses" in chapter 7.

Lights Mode

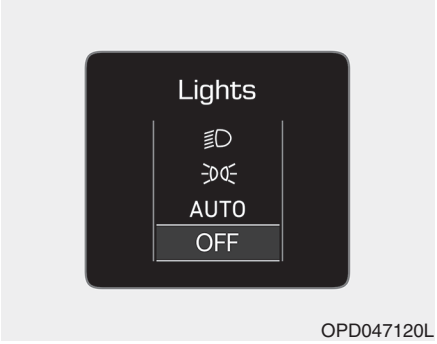

OPD047120L

This indicator displays which exterior light is selected using the lighting control.

Wiper

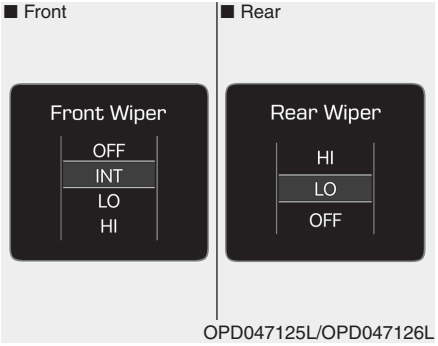

OPD047125L/OPD047126L

This indicator displays which wiper speed is selected using the wiper control.

Heated Steering Wheel turned off (if equipped)

This message is displayed if you turn off the heated steering wheel.

For more information, refer to "Heated Steering Wheel" in this chapter.

Low washer fluid (if equipped)

This warning message is displayed if the washer fluid level in the reservoir is nearly empty.

Have the washer fluid reservoir refilled.

Low fuel

This warning message is displayed if the fuel tank is almost out of fuel.

When this message is displayed, the low fuel level warning light in the cluster will come on.

It is recommended to look for the nearest fueling station and refuel as soon as possible.

Add fuel as soon as possible.

Engine overheated

This warning message is displayed when the engine coolant temperature is above 248°F (120°C). This means that the engine is overheated and may be damaged.

If your vehicle is overheated, refer to "Overheating" in chapter 6.

Check headlight (if equipped)

This warning message is displayed if the headlights are not operating properly. A headlight bulb may need to be replaced.

Information

Make sure to replace the burned out bulb with a new one of the same wattage rating.

Check High Beam Assist (HBA) system (if equipped)

This warning message is displayed if there is a problem with the High Beam Assist (HBA) system. Have the vehicle inspected by an authorized HYUNDAI dealer.

For more information, refer to "High Beam Assist (HBA) system" in chapter 3.

Check Forward Collision Avoidance Assist system (if equipped)

This warning message is displayed if there is a malfunction with the Forward Collision-Avoidance Assist (FCA) system. Have the vehicle inspected by an authorized HYUNDAI dealer.

For more information, refer to "Forward Collision-Avoidance Assist (FCA) system" in chapter 5.

Check Driver Attention Warning (DAW) system (if equipped)

This warning message is displayed if there is a problem with the Driver Attention Warning (DAW). Have the vehicle inspected by an authorized HYUNDAI dealer.

For more information, refer to "Driver Attention Warning (DAW)" in chapter 5.

Check Lane Keeping Assist (LKA) system (if equipped)

This warning message is displayed if there is a problem with the Check Lane Keeping Assist (LKA) system. Have the vehicle inspected by an authorized HYUNDAI dealer.

For more information, refer to "Check Lane Keeping Assist (LKA) system" in chapter 5.

LCD DISPLAY

LCD Display Control

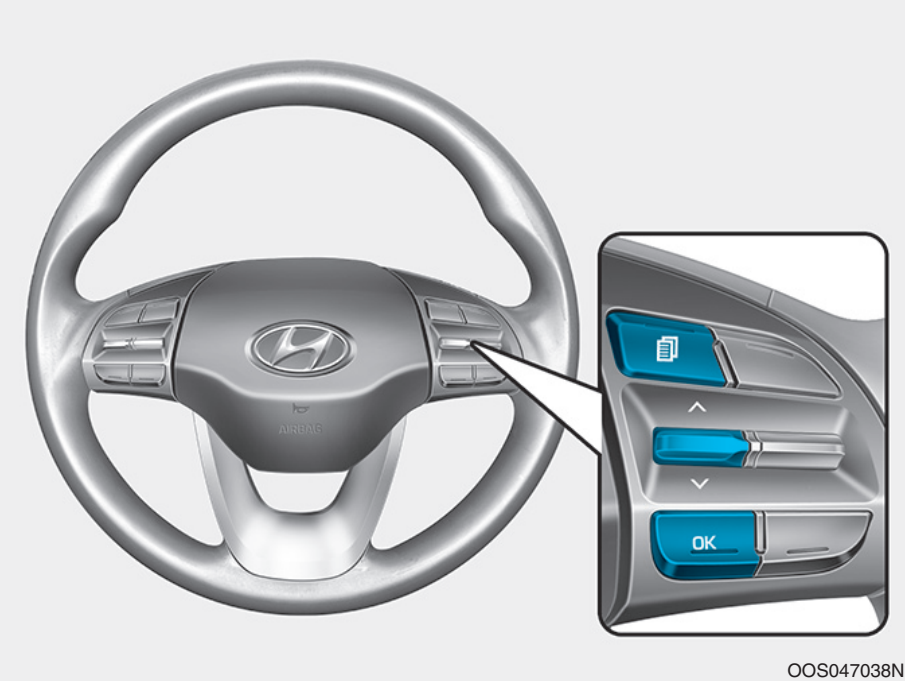

OOS047038N

The LCD display modes can be changed by using the control buttons.

(1) 🗐 : MODE button for changing modes

(2) ∧ , ∨ : MOVE switch for changing items

(3) OK : SELECT/RESET button for setting or resetting the selected item

LCD Display Modes

Modes	Symbol	Explanation
Trip Computer		This mode displays driving information such as the tripmeter, fuel economy, etc. **For more information, refer to "Trip Computer" in this chapter.**
Turn By Turn (TBT) (if equipped)		This mode displays the state of the navigation.
Assist (if equipped)		This mode displays the state of : - Lane Keeping Assist (LKA) system - Driver Attention Warning (DAW) system - Tire pressure **For more information, refer to "Lane Keeping Assist (LKA) system", "Driver Attention Warning (DAW) system" in chapter 5 and "Tire Pressure Monitoring System (TPMS)" in chapter 6.**
User Settings		The User Settings menu provides user options for a variety of settings including door lock/unlock features, convenience features, driver assistance settings, etc.
Warning		The Warning mode displays warning messages related to the vehicle when one or more systems is not operating normally.

The information provided may differ depending on which functions are applicable to your vehicle.

Shift to P to edit settings

This warning message appears if you try to adjust the User Settings while driving.

For your safety, change the User Settings after parking the vehicle, applying the parking brake and moving the shift lever to P (Park).

Quick guide help

This mode provides quick guides for the systems in the User Settings mode.

Select an item, press and hold the OK button.

For more information about each system, refer to this Owner's Manual.

Trip computer mode

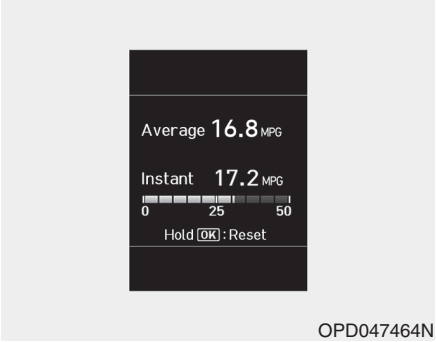

OPD047464N

The trip computer mode displays information related to vehicle driving parameters including fuel economy, tripmeter information and vehicle speed.

For more information, refer to "Trip Computer" in this chapter.

Turn By Turn (TBT) mode

OPDE046147R

This mode displays the state of the navigation.

Assist mode

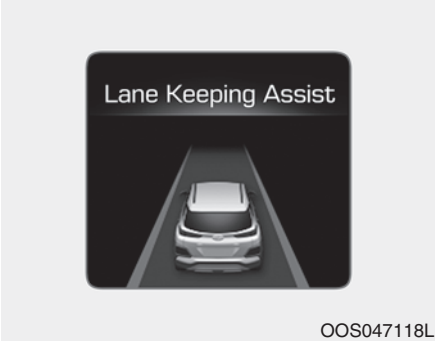

OOS047118L

LKA/DAW

This mode displays the state of the Lane Keeping Assist (LKA) system and Driver Attention Warning (DAW) system.

For more information, refer to each system in chapter 5.

OOS047119L

Tire Pressure

This mode displays information related to Tire Pressure.

For more information, refer to "Tire Pressure Monitoring System (TPMS)" in chapter 6.

Warning mode

If one of followings occurs, warning messages will be displayed on the LCD display for several seconds.

- Low washer fluid
- Exterior lamp malfunction (if equipped)
- Blind-Spot Collision Warning (BCW) system malfunction (if equipped)
- Tire Pressure Monitoring System (TPMS)
- High Beam Assist (HBA) malfunction (if equipped)
- Forward Collision-Avoidance Assist (FCA) malfunction (if equipped)

User settings mode

In this mode, you can change the settings of the instrument cluster, doors, lamps, etc.

1. Head-up display (if equipped)
2. Driver Assistance
3. Door
4. Lights
5. Sound
6. Convenience
7. Service interval
8. Other
9. Language
10. Reset

The information provided may differ depending on which functions are applicable to your vehicle.

1. Head-Up Display

Items	Explanation
Enable Head-Up Display	To activate or deactivate the Head-up display function.
Display Height	To adjust the height of the image displayed
Rotation	To adjust the angle of the image displayed.
Brightness	To adjust the brightness of the image displayed.
Content Selection	To select the content to be displayed. - Turn by Turn - Traffic Information - Cruise control - Lane keeping assist - Blind-spot Collision Warning
Speed Size	To select the speedometer size displayed. - Large/Medium/Small
Speed Color	To select the speedometer color displayed. - White/Orange/Green

For more information, refer to "Head-Up Display" in this chapter.

2. Driver Assistance

Items	Explanation
Driver Attention Warning (DAW) system	To adjust the sensitivity of the Driver Attention Warning. - Off / Normal Sensitivity / High Sensitivity **For more information, refer to the "Driver Attention Warning (DAW) System" in chapter 5.**
Lane Safety	To adjust the Lane Keeping Assist function. - Active LKA / Standard LKA / Lane Departure Warning **For more information, refer to the "Lane Keeping Assist (LKA) system" in chapter 5.**
Forward Collision-Avoidance Assist	To activate or deactivate the Forward Collision-Avoidance Assist system. **For more information, refer to the "Forward Collision-Avoidance Assist (FCA) System" in chapter 5.**
Forward Collision Warning	To adjust the initial warning alert time for Forward Collision-Avoidance Assist (FCA) system. - Early / Normal / Late **For more information, refer to "Forward Collision Avoidance Assist (FCA) System" in chapter 5.**
Blind-Spot Collision Warning (BCW) Sound	To activate or deactivate the Blind- Spot Collision Warning sound. **For more information, refer to "Blind-Spot Collision Warning (BCW) System" in chapter 5.**

3. Door

Items	Explanation
Auto Lock	- Disable: The auto door lock operation will be canceled. - Enable on speed: All doors will be automatically locked when the vehicle speed exceeds 9.3 mph (15 km/h). - Enable on shift: All doors will be automatically locked if the vehicle is shifted from the P (Park) position to the R (Reverse), N (Neutral), or D (Drive) position.
Auto Unlock	- Disable: The auto door unlock operation will be canceled. - On Key Out: All doors will be automatically unlocked when the ignition key is removed from the key ignition switch (if equipped with remote key). - Vehicle Off: All doors will be automatically unlocked when the Engine Start/Stop button is set to the OFF position. (if equipped with smart key) - On shift to P: All doors will be automatically unlocked if the automatic transmission is shifted to the P (Park) position.
Two Press Unlock	- Off: The two press unlock function will be deactivated. Therefore, all doors will unlock if the door unlock button is pressed. - On: Only the driver's door will unlock if the door unlock button is pressed. When the door unlock button is pressed again within 4 seconds, the remaining doors will unlock.
Horn Feedback	To activate or deactivate the horn feedback. If the horn feedback is activated, after locking the door by pressing the lock button on the remote key, and pressing it again within 4 seconds, the horn feedback sound will operate once to indicate that all doors are locked (if equipped with remote key).

4. Lights

Items	Explanation
One Touch Turn Signal	- Off: The one touch turn signal function will be deactivated. - 3, 5, 7 Flashes: The turn signal indicator will blink 3, 5, or 7 times when the turn signal lever is moved slightly. **For more information, refer to "Lighting" in this chapter.**
Headlight Delay	To activate or deactivate the headlight delay function. **For more information, refer to "Lighting" in this chapter.**

5. Sound

Items	Explanation
Welcome Sound	To activate or deactivate the welcome sound function.

6. Convenience

Items	Explanation
Wireless Charging System	To activate or deactivate the wireless charging system in the front seat. **For more information, refer to "Wireless Charging System" in this chapter.**
Wiper/Lights Display	To activate or deactivate the Wiper/Light mode. When activated, the LCD display shows the selected Wiper/Light mode whenever you change the mode.
Gear Position Pop-up	To activate or deactivate the gear position pop-up. When activated, the gear position will be displayed in the cluster LCD display.
Icy Road Warning	To activate or deactivate the Icy Road Warning function.

7. Service interval

Items	Explanation
Service Interval	To activate or deactivate the service interval function.
Adjust Interval	If the service interval menu is activated, you may adjust the time and distance.

If the service interval is activated and the time and distance is adjusted, messages are displayed in the following situations each time the vehicle is turned on.
- Service in: Displayed to inform the driver the remaining mileage and days to service.
- Service required: Displayed when the mileage and days to service has been reached or passed.

Information

If any of the following conditions occur, the mileage and number of days to service may be incorrect.
- The battery cable is disconnected.
- The fuse switch is turned off.
- The battery is discharged.

8. Other

Items	Explanation
Fuel Economy Reset	- Off: The average fuel economy will not reset automatically whenever refueling. - After ignition: When the engine has been OFF for 4 hours or longer the average fuel economy will reset automatically. - After refueling: The average fuel economy will reset automatically after adding 1.6 gallons (6 liters) of fuel or more and after driving speed exceeds 1 mph (1 km/h). **For more information, refer to "Trip Computer" in this chapter.**
Fuel Economy Unit	To select the fuel economy unit. - US gallon / UK gallon
Temperature Unit	To select the temperature unit. - °C / °F
Tire Pressure Unit	To select the tire pressure unit. - psi / kPa / bar

9. Language

Items	Explanation
Language	To select language.

10. Reset

Items	Explanation
Reset	You can reset the menus in the User Settings mode. All menus in the User Settings mode are reset to factory settings, except language and service interval.

TRIP COMPUTER

The trip computer is a microcomputer-controlled driver information system that displays information related to driving.

Information

Some driving information stored in the trip computer (for example Average Vehicle Speed) resets if the battery is disconnected.

Trip modes

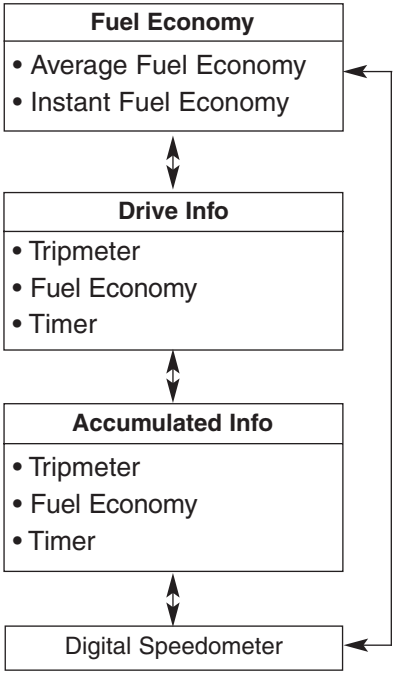

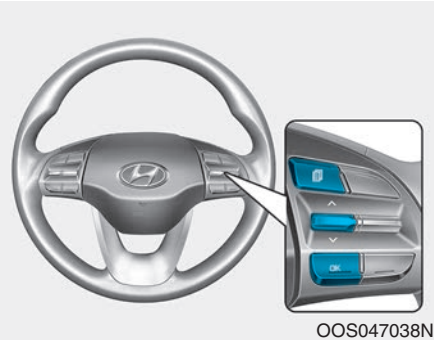

To change the trip mode, toggle the "∧, ∨" switch on the steering wheel.

Average fuel economy/ Instant fuel economy

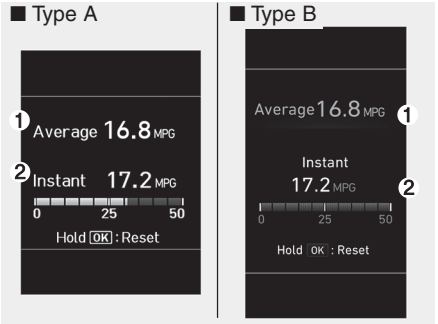

OPD047464N/OPD047465N

Average Fuel Economy (1)

- The average fuel economy is calculated by the total driving distance and fuel consumption since the last average fuel economy reset.
- The average fuel economy can be reset both manually and automatically.

Manual reset

To clear the average fuel economy manually, press the OK button on the steering wheel for more than 1 second when the average fuel economy is displayed.

Automatic reset

To automatically reset the average fuel economy, select between "After Ignition" or "After Refueling" in the User Settings mode on the LCD display.

- After Ignition: When the engine has been OFF for 4 hours or longer the average fuel economy will reset automatically.
- After Refueling: The average fuel economy will reset automatically after adding 1.6 gallons (6 liters) of fuel or more and after driving speed exceeds 1 mph (1 km/h).

Information

The vehicle must be driven for a minimum of 0.19 miles (300 meters) since the last ignition key cycle before the average fuel economy will be recalculated.

Instant Fuel Economy (2)

- The instantaneous fuel economy is displayed according to the bar graph in the LCD display while driving.

Accumulated Info display

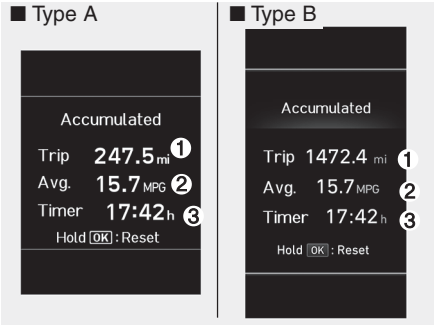

OPD047466N/OPD047467N

This display shows the accumulated trip distance (1), the average fuel economy (2), and the total driving time (3).

The information is accumulated starting from the last reset.

To reset the information, press and hold the OK button when viewing the Accumulated driving info. The trip distance, the average fuel economy, and total driving time will reset simultaneously.

The accumulated driving information will continue to be counted while the engine is still running (for example, when the vehicle is in traffic or stopped at a stop light).

Information

The vehicle must be driven for a minimum of 0.19 miles (300 meters) since the last ignition key cycle before the average fuel economy will be recalculated.

Drive Info display

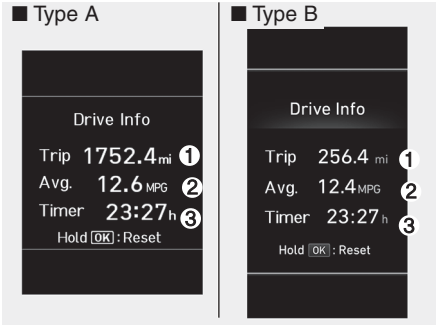

OPD047468N/OPD047469N

This display shows the trip distance (1), the average fuel economy (2), and the total driving time (3).

The information is combined for each ignition cycle. However, when the engine has been OFF for 4 hours or longer the Drive Info screen will reset.

To manually reset the information, press and hold the OK button when viewing the Drive Info. The trip distance, the average fuel economy, and total driving time will reset simultaneously.

The driving information will continue to be counted while the engine is still running (for example, when the vehicle is in traffic or stopped at a stop light).

Information

The vehicle must be driven for a minimum of 0.19 miles (300 meters) since the last ignition key cycle before the average fuel economy will be recalculated.

Digital speedometer

The digital speedometer display shows the speed of the vehicle.

HEAD UP DISPLAY (HUD) (IF EQUIPPED)

The Head-Up Display is an optional feature that allows the driver to view information projected onto a transparent screen while still keeping your eyes safely on the road ahead while driving.

Precautions while using the head up display

It may sometimes be difficult to read information on the head up display in the following situations.

- The driver is improperly positioned in the driver's seat.
- The driver wears polarizing-filter sunglasses.
- An object is located above the head up display cover.
- The vehicle is driven on a wet road.
- Any improper lighting accessory is installed inside the vehicle, or there is incoming light from outside of the vehicle.
- The driver wears glasses.
- The driver wears contact lenses.

When it is difficult to read the head up display information, adjust the image height of HUD or the head up display brightness level in the User Settings Mode. For more information, refer to "LCD Display" in this chapter.

⚠ WARNING

- **Do not attach any stickers or accessories on the head-up display or crash pad.**
- **Do not attempt to adjust or try to move the combiner screen or the mechanical door on top of the dash manually by hand.**
- **The image may be invisible due to finger prints. Also, excessive force applied during operation may damage the display.**
- **Do not place any objects near the head-up display. Interference with such objects during activation may influence the operation or damage the display.**
- **Do not put any drinks near the head-up display. If liquid flows in the display, the unit could be damaged.**

- **Do not place any objects on or around the head-up display. Do not apply any decals or stickers on the combiner screen. Doing so may obstruct the image display.**
- **Avoid prolonged exposure of direct sunlight onto the combiner screen.**
- **Do not place any objects on, inside, or near the combiner screen when the head-up display is either opened or closed.**

  Use caution to prevent any objects from falling inside the mechanical door.
- **Use only a soft cloth to clean the combiner screen. Do not use any organic solvents, detergents, or polishing materials. Doing so could damage the display.**
- **For your safety, make sure to stop the vehicle before adjusting the settings.**

⚠ CAUTION

- **When you open or close the HUD, noise may occur from the motor and gear.**
- **When you adjust the image height of the HUD, noise may occur from the motor and gear.**

Head Up Display ON/OFF

OOS047402N

Use the button on the left hand side of the dash panel to activate/deactivate the Head-up display when the ignition is in the ON position or when the engine is running.

The Head-Up display will retract automatically when the engine is turned OFF and the doors are locked with the Smart Key or when pressing the button on the outside door handle.

Note that if the engine is turned OFF and the doors are not locked, the Head-up display will automatically retract after approximately five minutes.

Head Up Display Information

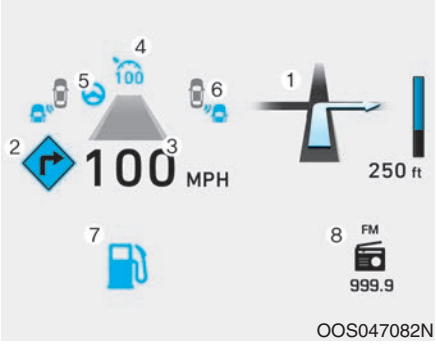

1. Turn By Turn (TBT) navigation information
2. Speed Limit Sign
3. Speedometer
4. Cruise Control SET Indicator
5. Lane Keeping Assist (LKA) system information
6. Blind-spot Collision Warning (BCW) system information
7. Warning Message (Low Fuel, etc.)
8. Audio Station Info

Information

If you select the Turn By Turn (TBT) navigation information as HUD contents, the Turn By Turn (TBT) navigation information will not be displayed on the LCD Display.

Head Up Display Setting

On the LCD display, you can change the head up display settings as follows.

- Display Height
- Rotation
- Brightness
- Content Select
- Speedometer Size
- Speedometer Color

For more information, refer to "LCD Display" in this chapter.

LIGHTING

Exterior Lights

Lighting control

To operate the lights, turn the knob at the end of the control lever to one of the following positions:

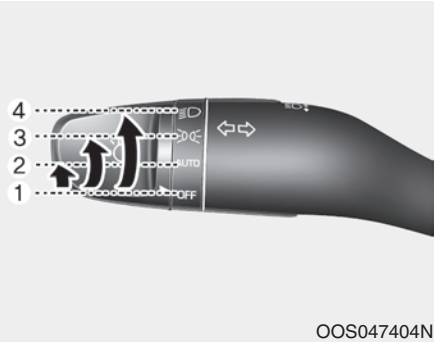

OOS047404N

1. OFF position
2. AUTO headlamp position
3. Parking lamp position
4. Headlamp position

Daytime running light (DRL)

The Daytime Running Lights (DRL) can make it easier for others to see the front of your vehicle during the day, especially after dawn and before sunset.

The DRL system will turn the dedicated lamp OFF when :

- The headlamps are ON.
- The parking lamps are ON.
- The vehicle is turned off.
- The parking brake is engaged.

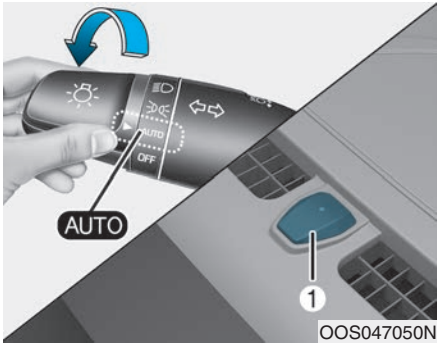

OOS047050N

AUTO headlamp position (if equipped)

The parking lamp and headlamp will be turned ON or OFF automatically depending on the amount of daylight as measured by the ambient light sensor on the center dash.

Even with the AUTO headlamp feature in operation, it is recommended to manually turn ON the headlamps when driving at night or in a fog, driving in the rain, or when you enter dark areas, such as tunnels and parking facilities.

NOTICE

- **Do not cover or spill anything on the sensor (1) located in front of the instrument panel.**
- **Do not clean the sensor using a window cleaner, the cleanser may leave a light film which could interfere with sensor operation.**
- **If your vehicle has window tint or other types of metallic coating on the front windshield, the AUTO headlamp system may not work properly.**

OOS047405N

Parking lamp position ( )

The parking lamp, license plate lamp and instrument panel lamp are turned ON.

OOS047406N

Headlamp position ( )

The headlamp, parking lamp, license plate lamp and instrument panel lamp are turned ON.

Information

The ignition switch must be in the ON position to turn on the headlamp.

High beam operation

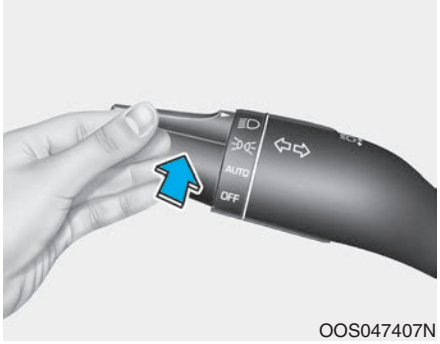

OOS047407N

To turn on the high beam headlamp, push the lever away from you. The lever will return to its original position.

The high beam indicator will light when the headlamp high beams are switched on.

To turn off the high beam headlamp, pull the lever towards you. The low beams will turn on.

⚠ WARNING

Do not use high beam when there are other vehicles approaching you. Using high beam could obstruct the other driver's vision.

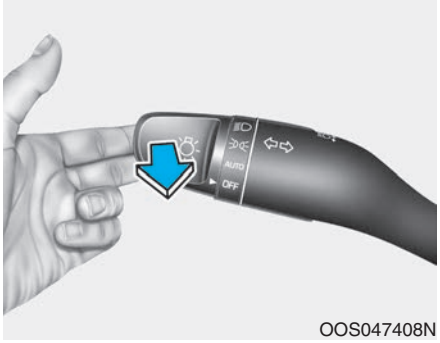

OOS047408N

To flash the high beam headlamp, pull the lever towards you, then release the lever. The high beams will remain ON as long as you hold the lever towards you.

High Beam Assist (HBA) (if equipped)

OOS047409N

The High Beam Assist (HBA) is a system that automatically adjusts the headlamp range (switches between high beam and low beam) according to the brightness of other vehicles and road conditions.

Operating condition

1. Place the headlamp switch in the AUTO position.
2. Turn on the high beam by pushing the lever away from you.

   The High Beam Assist (HBA) (AUTO) indicator will illuminate.

3. The High Beam Assist (HBA) will turn on when vehicle speed is above 25 mph (40 km/h).
   - If the headlamp switch is pushed away when the High Beam Assist (HBA) is operating, the High Beam Assist (HBA) will turn off and the high beam will be on continuously.
   - If the headlamp switch is pulled towards you when the high beam is off, the high beam will turn on without the High Beam Assist (HBA) canceled. When you let go of the light switch, the lever will move to the middle and the high beam will turn off.
   - If the headlamp switch is pulled towards you when the high beam is on by the High Beam Assist (HBA), the low beam will be on and the High Beam Assist (HBA) will turn off.
   - If the headlamp switch is placed to the headlamp ON position, the High Beam Assist (HBA) will turn off and the low beam will be on continuously.

When the High Beam Assist (HBA) is operating, the high beam switches to low beamif any of the following conditions occur :

- When the headlamp of an on-coming vehicle is detected.
- When the tail lamp of a vehicle in front is detected.
- When the headlamp or tail lamp of a motorcycle or a bicycle is detected.
- When the surrounding ambient light is bright enough that high beams are not required.
- When streetlights or other lights are detected.
- When the headlamp switch is not in the AUTO position.
- When the High Beam Assist (HBA) is off.
- When vehicle speed is below 22mph (35 km/h).

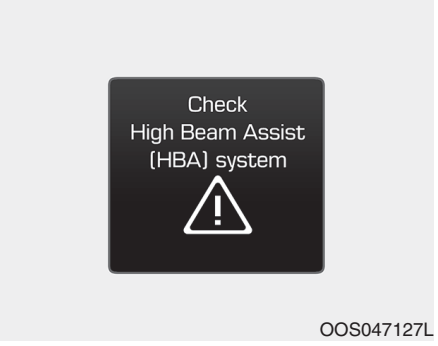

OOS047127L

Warning light and message

When the High Beam Assist (HBA) is not working properly, the Check High Beam Assist warning message will come on for a few second. After the message disappears, the master warning light (⚠) will illuminate. Take your vehicle to an authorized HYUNDAI dealer and have the system checked.

⚠ WARNING

The system may not operate normally if any of the following conditions should occur:

1) When the illumination from an on-coming vehicle or a vehicle in front is dim. Such examples may include:

- **When the headlamps of an on-coming vehicle or the tail lamps of a vehicle in front is covered with dust, snow, or water.**
- **When the headlamps on an on-coming vehicle are OFF, but the fog lamps are ON.**

2) When the High Beam Assist camera is adversely affected by an external condition. Such examples may include:

- **When the vehicle's headlamps have been damaged or not repaired properly.**
- **When the vehicle headlamps are not aimed properly.**
- **When the vehicle is driven on a narrow curved road or rough road**
- **When the vehicle is driven on an uphill road or downhill road**
- **When only part of the vehicle in front is visible on a crossroad or curved road.**
- **When there is a traffic light, reflecting sign, flashing sign or mirror.**
- **When the road conditions are bad such as being wet or covered with snow.**
- **When a vehicle suddenly appears from a curve.**
- **When the vehicle is tilted from a flat tire or being towed.**
- **When the Lane Keeping Assist (LKA) system warning light illuminates.**
- **When the light from the on-coming or front vehicle is not detected because of exhaust fume, smoke, fog, snow, etc.**
- **When the front window is covered with foreign matters such as ice, dust, fog, or is damaged.**

3) When the forward visibility is poor. Such examples may include:

- **When the headlamps of an on-coming vehicle or a vehicle in front is not detected due to poor outside visibility (smog, smoke, dust, fog, heavy rain, snow, etc.).**
- **When the windshield visibility is poor.**

⚠ WARNING

- **Do not attempt to disassemble the front view camera without the assistance of an authorized HYUNDAI dealer technician. If camera is removed for any reason, the system may need to be re-calibrated. Have the system inspected by an authorized HYUNDAI dealer.**
- **If the windshield of your vehicle is replaced, most likely the front view camera will need to be re-calibrated. If this occurs, have your vehicle inspected and have the system re-calibrated by an authorized HYUNDAI dealer.**
- **Be careful that water doesn't get into the High Beam Assist (HBA) unit and do not remove or damage related parts of the High Beam Assist (HBA) system.**

- **Do not place objects on the crash pad that reflect light such as mirrors, white paper, etc. The system may malfunction if sunlight is reflected.**
- **At times, the High Beam Assist (HBA) may not work properly. The system is for your convenience only. It is the responsibility of the driver for safe driving practices and always check the road conditions for your safety.**
- **When the system does not operate normally, change the headlamp position manually between the high beam and low beam.**

Turn signals and lane change signals

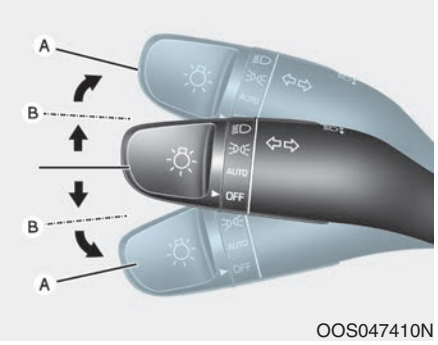

OOS047410N

To signal a turn, push down on the lever for a left turn or up for a right turn in position (A).

If an indicator stays on and does not flash or if it flashes abnormally, one of the turn signal bulbs may be burned out and will require replacement.

Onetouch turn signal function

To activate the One Touch Turn Signal function, push the turn signal lever up or down to position (B) and then release it.

The lane change signals will blink 3, 5 or 7 times.

You can activate or deactivate the One Touch Turn Signal function or choose the number of blinks (3, 5, or 7) from the User Settings mode in the LCD display.

For more information, refer to the "LCD Display" section in this chapter.

Front fog lamp (if equipped)

OOS047414N

Fog lamps are used to provide improved visibility when visibility is poor due to fog, rain or snow, etc. Use the switch next to the headlamp switch to turn the fog lamps ON and OFF.

1. Turn on the parking lamp.
2. Turn the headlamp switch (1) to the front fog lamp position.
3. To turn off the front fog lamp, turn the headlamp switch to the front fog lamp position again or turn off the parking lamp.

NOTICE

When in operation, the fog lamps consume large amounts of vehicle electrical power. Only use the fog lamps when visibility is poor.

Battery saver function

The purpose of this feature is to prevent the battery from being discharged. The system automatically turns off the parking lamp when the driver turns the vehicle off and opens the driver-side door.

With this feature, the parking lamps will turn off automatically if the driver parks on the side of road at night.

If necessary, to keep the lamps on when the vehicle is turned off, perform the following:

1) Open the driver-side door.
2) Turn the parking lamps OFF and ON again using the headlamp switch on the steering column.

Headlamp delay function

If the key is removed from the ignition switch or placed in the ACC position or the LOCK/OFF position with the headlamps ON, the headlamps (and/or parking lamps) remain on for about 5 minutes. However, if the driver's door is opened and closed, the headlights are turned off after 15 seconds. Also, with the engine off if the driver's door is opened and closed, the headlamps (and/or parking lamps) are turned off after 15 seconds.

The headlamps (and/or parking lamps) can be turned off by pressing the lock button on the remote key or smart key twice or turning the headlamp switch to the OFF or AUTO position.

You can activate or deactivate the Headlamp Delay function from the User Settings Mode in the LCD display.

For more information, refer to the "LCD Display" section in this chapter.

NOTICE

If the driver exits the vehicle through another door besides the driver door, the battery saver function does not operate and the headlamp delay function does not turn OFF automatically.

This may cause the battery to discharge. To avoid battery discharge, turn OFF the headlamps manually from the headlamp switch before exiting the vehicle.

Smart cornering lamp (if equipped)

As an optional safety feature, your vehicle may be equipped with a smart cornering lamp. The cornering lamp turns ON automatically while driving when the vehicle enters into a cornering maneuver.

The system will operate under the following conditions:

- When the headlamps are turned ON
- When the steering angle is above 25 to 35 degrees (depending on vehicle speed)
- When the vehicle speed is under 25 mph (40 kph)

When the smart cornering lamp turns on, the front fog lamp turns off. (if equipped)

Interior Lights

⚠ WARNING

Do not use the interior lights when driving in the dark. The interior lights may obscure your view and cause an accident.

NOTICE

Do not use the interior lights for extended periods when the vehicle is turned off or the battery will discharge.

Interior lamp AUTO cut

The interior lamps will automatically go off approximately 20 minutes after the engine is turned off and the doors are closed. If a door is opened, the lamp will go off 40 minutes after the engine is turned off. If the doors are locked by the remote key or smart key and the vehicle enters the armed stage of the theft alarm system, the lamps will go off five seconds later.

Front lamps

■ Type A (Without sunglass case)

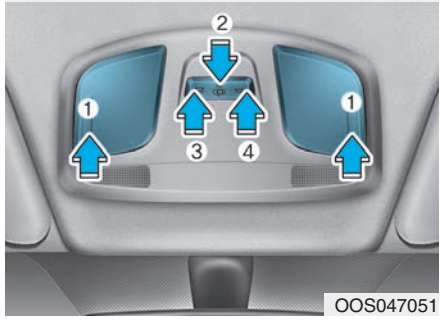

OOS047051

■ Type B (With sunglass case)

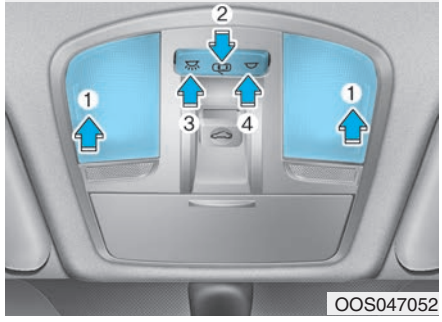

OOS047052

Front Map Lamp (1) :

Press either lenses to turn the map lamp on or off. This light produces a spot beam for convenient use as a map lamp at night or as a personal lamp for the driver and the front passenger.

Front Door Lamp (2) ( ):

The front or rear room lamps come on when the front or rear doors are opened if the engine is running or not. When doors are unlocked by the remote key or smart key, the front and rear lamps come on for approximately 30 seconds as long as any door is not opened. The front and rear room lamps go out gradually after approximately 30 seconds when the door is closed. However, if the ignition switch is in the ON position or all doors are locked, the front and rear lamps will turn off. If a door is opened with the ignition switch in the ACC position or the OFF position, the front and rear lamps stay on for about 20 minutes.

Front room lamp

- (3) :
  Press the button to turn ON the room lamp for the front/rear seats.

- (4) :
  Press the button to turn OFF the room lamp for the front/rear seats regardless of front or rear door open position.

Rear lamp

■ Type A

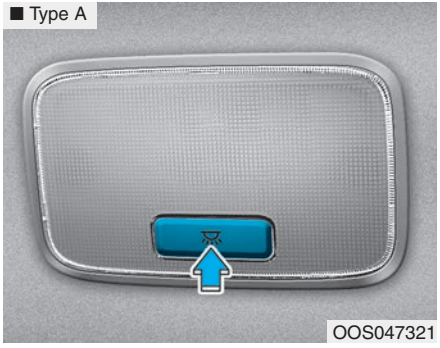

OOS047321

■ Type B

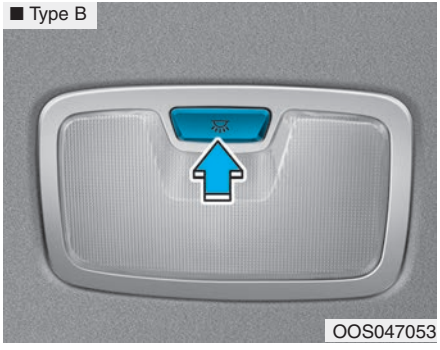

OOS047053

Rear Room Lamp ( ):

Press this switch to turn the rear room lamp on and off.

Luggage compartment lamp (if equipped)

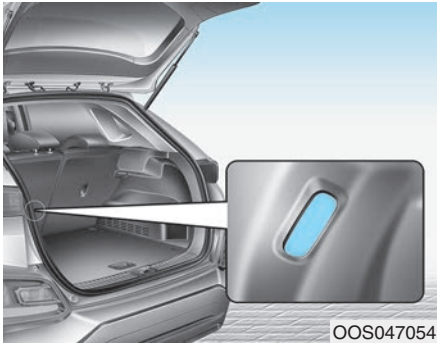

OOS047054

The luggage compartment lamp comes on when the liftgate is opened.

NOTICE

The luggage compartment lamp comes on as long as the liftgate is open. To prevent unnecessary battery system drain, close the liftgate securely after using the luggage compartment.

Vanity mirror lamp

Push the switch to turn the light on or off.

- : The lamp will turn on if this button is pressed.
- ◯ : The lamp will turn off if this button is pressed.

NOTICE

Always have the switch in the off position when the vanity mirror lamp is not in use. If the sunvisor is closed without the lamp off, it may discharge the battery or damage the sunvisor.

Welcome System

Welcome light

Interior lamp

When the interior lamp switch is in the DOOR position and all doors are closed and locked, the room lamp will come on for 30 seconds if any of the below is performed.

- When the door unlock button is pressed on the remote key or smart key.
- When the button of the outside door handle is pressed.

At this time, if you press the door lock or unlock button on the remote key or smart key the room lamp will turn off immediately.

WIPERS AND WASHERS

■ Front windshield wiper/washer

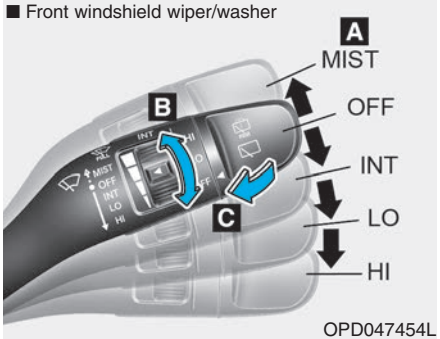

OPD047454L

■ Rear windshield wiper/washer

OTLA045318

A : Wiper speed control

- MIST – Single wipe
- OFF – Off
- INT – Intermittent wipe
  AUTO* – Auto control wipe
- LO – Low wiper speed
- HI – High wiper speed

B : Intermittent control wipe time adjustment

C : Wash with brief wipes (pull lever towards you)

D : Rear wiper/washer control

- HI – High wiper speed
- LO – Low wiper speed
- OFF – Off

E : Wash with brief wipes (rear) (push lever away from you)

* : if equipped

Windshield Wipers

Operates as follows when the ignition switch is in the ON position.

MIST : For a single wiping cycle, push the lever upward and release. The wipers will operate continuously if the lever is held in this position.

OFF : Wiper is not in operation.

INT : Wiper operates intermittently at the same wiping intervals. To vary the speed setting, move the speed control lever. The top most setting will run the wipers most frequently (for more rain). The bottom setting will run the wipers the least frequently (for less rain).

AUTO : The rain sensor located on the upper end of the windshield glass senses the amount of rainfall and controls the wiping cycle for the proper interval. The more it rains, the faster the wiper operates. When the rain stops, the wiper stops.To vary the speed setting, turn the speed control knob (B).

LO : The wiper runs at a lower speed.

HI : The wiper runs at a higher speed.

Information

If there is heavy accumulation of snow or ice on the windshield, defrost the windshield for about 10 minutes, or until the snow and/or ice is removed before using the windshield wipers to ensure proper operation.

If you do not remove the snow and/or ice before using the wiper and washer, it may damage the wiper and washer system.

AUTO (Automatic) control (if equipped)

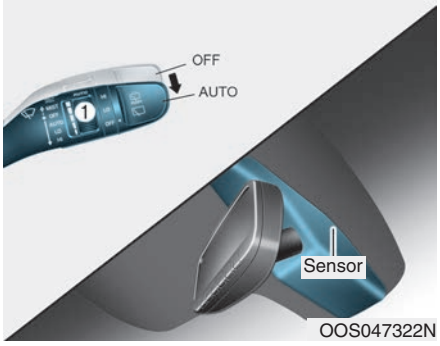

The rain sensor located on the upper end of the windshield glass senses the amount of rainfall and controls the wiping cycle for the proper interval.

The wiper operation time will be automatically controlled depends on rainfall.

When the rain stops, the wiper stops.

To vary the sensitivity setting, turn the sensitivity control knob (1).

If the wiper switch is set in AUTO mode when the ignition switch is in the ON position, the wiper will operate once to perform a self-check of the system. Set the wiper to OFF position when the wiper is not in use.

⚠ WARNING

To avoid personal injury from the windshield wipers, when the engine is running and the windshield wiper switch is placed in the AUTO mode:

- **Do not touch the upper end of the windshield glass facing the rain sensor.**
- **Do not wipe the upper end of the windshield glass with a damp or wet cloth.**
- **Do not put pressure on the windshield glass.**

⚠ CAUTION

- **When washing the vehicle, set the wiper switch in the OFF position to stop the auto wiper operation. The wiper may operate and be damaged if the switch is set in the AUTO mode while washing the vehicle.**
- **Do not remove the sensor cover located on the upper end of the passenger side windshield glass. Damage to system parts could occur and may not be covered by your vehicle warranty.**
- **Because of using a photo sensor, temporary malfunction could occur according to sudden ambient light change made by stone and dust while driving.**

Windshield Washers

OTLE045164

In the OFF position, pull the lever gently toward you to spray washer fluid on the windshield and to run the wipers 1-3 cycles. The spray and wiper operation will continue until you release the lever. If the washer does not work, you may need to add washer fluid to the washer fluid reservoir.

⚠ WARNING

When the outside temperature is below freezing, ALWAYS warm the windshield using the defroster to help prevent the washer fluid from freezing on the windshield and obscuring your vision which could result in an accident and serious injury or death.

NOTICE

- **To prevent possible damage to the washer pump, do not operate the washer when the fluid reservoir is empty.**
- **To prevent possible damage to the wipers or windshield, do not operate the wipers when the windshield is dry.**
- **To prevent damage to the wiper arms and other components, do not attempt to move the wipers manually.**
- **To prevent possible damage to the wipers and washer system, use anti-freezing washer fluids in the winter season or cold weather.**

Rear Window Wiper and Washer

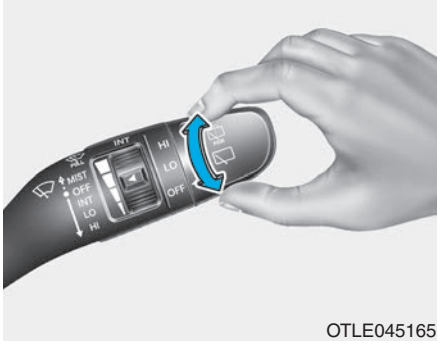

OTLE045165

The rear window wiper and washer switch is located at the end of the wiper and washer switch lever. Turn the switch to the desired position to operate the rear wiper and washer.

HI – High wiper speed

LO – Low wiper speed

OFF – Off

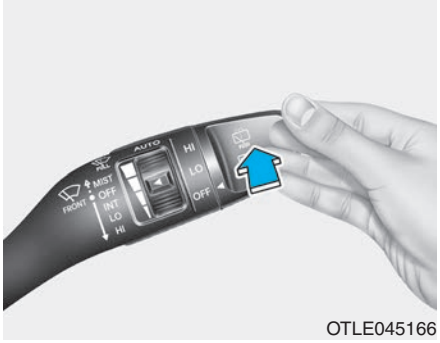

OTLE045166

Push the lever away from you to spray rear washer fluid and to run the rear wipers 1~3 cycles. The spray and wiper operation will continue until you release the lever.

Auto rear wiper

The rear wiper will operate while the vehicle is in reverse with the front wiper ON by selecting the function on the LCD display.

Go to 'User Settings → Convenience → Auto Rear Wiper (in R)'.

DRIVER ASSIST SYSTEM

Rear view monitor

OOS047046

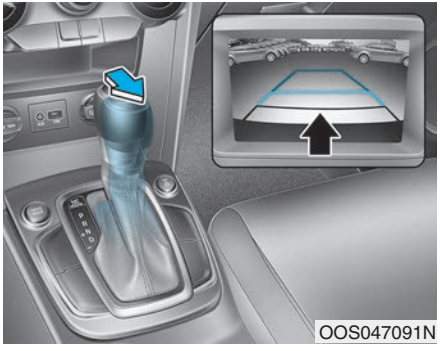
OOS047091N

The rear view monitor will activate when the engine is running and the shift lever is in the R (Reverse) position.

This is a supplemental system that helps provide a view of the area behind the vehicle through the audio display while the vehicle is in the R (Reverse) position.

⚠ WARNING

The rear view monitor is not a safety device. It only serves to assist the driver in identifying objects directly behind the middle of the vehicle. The camera does NOT cover the complete area behind the vehicle.

⚠ WARNING

- **Never rely solely on the Rear view monitor when backing-up.**
- **ALWAYS look around your vehicle to make sure there are no objects or obstacles before moving the vehicle in any direction to prevent a collision.**
- **Always pay close attention when the vehicle is driven close to objects, particularly pedestrians, and especially children.**

NOTICE

Always keep the camera lens clean. The camera may not work normally if the lens is covered with dirt, water or snow.

Rear Parking Sensor Warning System (if equipped)

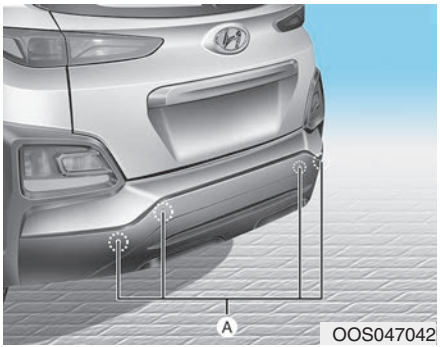

[A] : Sensor

The optional Rear Parking Sensor Warning System assists the driver during reverse movement of the vehicle by chiming if any object is sensed within approximately 50 in (120 cm) behind the vehicle.

This system is a supplemental system that senses objects within the range and location of the sensors, it cannot detect objects in other areas where sensors are not installed.

⚠ WARNING

- **ALWAYS look around your vehicle to make sure there are not any objects or obstacles before moving the vehicle in any direction to prevent a collision.**
- **Always pay close attention when the vehicle is driven close to objects, particularly pedestrians, and especially children.**
- **Be aware that some objects may not be visible on the screen or be detected by the sensors, due to the objects distance, size or material, all of which can limit the effectiveness of the sensor.**

Operation of the Rear Parking Sensor System

Operating condition

- This system will activate when backing up with the ignition switch in the ON position. However, if the vehicle speed exceeds 3 mph (5km/h), the system may not detect objects.
- If the vehicle speed exceeds 6 mph (10 km/h), the system will not warn you even though objects are detected.
- When more than two objects are sensed at the same time, the closest one will be recognized first.

Types of warning sound and indicator

Types of warning sound	Indicator
When an object is 24 to 47 in (60 to 120 cm) from the rear bumper, the warning sound beeps intermittently.	
When an object is 12 to 24 in (30 to 60 cm) from the rear bumper, the warning sound beeps more frequently.	
When an object is within 12 in (30 cm) from the rear bumper, the warning sound beeps continuously.	

NOTICE

- **The indicator may differ from the illustration as objects or sensors status. If the indicator blinks, have your vehicle checked by an authorized HYUNDAI dealer.**
- **If the audible warning does not sound or if the buzzer sounds intermittently when shifting into R (Reverse) position, this may indicate a malfunction with the Parking Assist System. If this occurs, have your vehicle checked by an authorized HYUNDAI dealer as soon as possible.**

To Turn OFF the Rear Parking Sensor Warning System

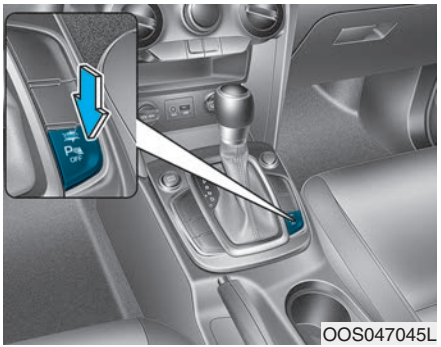

Push the button to turn OFF the Rear Parking Sensor Warning system. The indicator light on the button will turn on.

Conditions Where the Rear Parking Sensor Warning System May Not Operate

The Rear Parking Sensor Warning system may not operate normally when any of the following occur:

- The sensor is covered with dirt or debris such as snow or ice, or the sensor cover is blocked.

The Rear Parking Sensor Warning system may experience a malfunction when the following occurs:

- Driving on uneven road surfaces such as unpaved roads, gravel, bumps, or gradient.
- Objects generating excessive noise such as vehicle horns, loud motorcycle engines, or truck air brakes can interfere with the sensor.
- Heavy rain or water spray is present.
- Wireless transmitters or mobile phones are present near the sensor.
- The sensor is covered with snow.
- Any non-factory equipment or accessories have been installed, or if the vehicle bumper height or sensor installation has been modified.

Detecting range may decrease when:

- Outside air temperature is extremely hot or cold.
- Undetectable objects smaller than 40 inches (1 m) and narrower than 6 inches (14 cm) in diameter.

The following objects may not be recognized by the sensor:

- Sharp or slim objects such as ropes, chains or small poles.
- Objects, which tend to absorb sensor frequency such as clothes, spongy material or snow.

Rear Parking Sensor Warning System Precautions

- The Rear Parking Sensor Warning system may not operate consistently in some circumstances depending on the speed of the vehicle and the shapes of the objects detected.
- The Rear Parking Sensor Warning system may malfunction if the vehicle bumper height or sensor installation has been modified or damaged. Any non-factory installed equipment or accessories may also interfere with the sensor performance.
- The sensor may not recognize objects less than 15 in. (40 cm) from the sensor, or it may sense an incorrect distance. Use caution.
- When the sensor is blocked with snow, dirt, debris, or ice, the rear parking assist system may be inoperative until the snow or ice melts, or the debris is removed. Use a soft cloth to wipe debris away from the sensor.
- Do not push, scratch or strike the sensor with any hard objects that could damage the surface of the sensor. Sensor damage could occur.
- Do not spray the sensors or its surrounding area directly with a high pressure washer. Doing so may cause the sensors to fail to operate normally.

⚠ WARNING

Extreme caution should always be taken to avoid accidents or vehicle injuries. Do not solely rely on the Rear Parking Sensor Warning System. Always drive safely and cautiously, especially when backing up in reverse.

MANUAL CLIMATE CONTROL SYSTEM (IF EQUIPPED)

1. Fan speed control knob
2. Temperature control knob
3. Mode selection knob
4. Front windshield defroster position
5. A/C (Air conditioning) button
6. Rear window defroster button
7. Air intake control (recirculation) button

OOS047300L

Heating and Air Conditioning

1. Start the engine.
2. Set the mode to the desired position.

   To improve the effectiveness of heating and cooling, select the mode according to the following:

   - Heating:
   - Cooling:
3. Set the temperature control to the desired position.
4. Set the air intake control to improve the effectiveness of heating and cooling, select the mode according to the following:
5. Set the fan speed control to the desired speed.
6. If air conditioning is desired, turn the air conditioning system on.

Mode selection

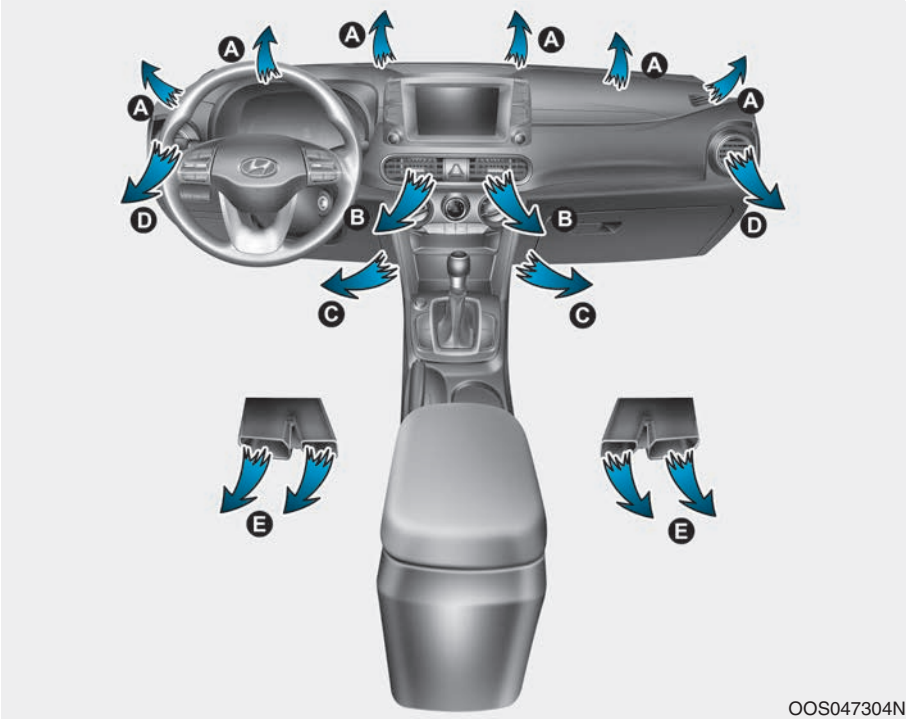

The mode selection knob controls the direction of the air flow through the ventilation system. Air can be directed to the floor, dashboard outlets, or windshield. Five symbols are used to represent Face, Bi-Level, Floor, Floor-Defrost and Defrost air position.

Face-Level (B, D)

Air flow is directed toward the upper body and face. Additionally, each outlet can be controlled to direct the air discharged from the outlet.

Bi-Level (B, C, D, E)

Air flow is directed towards the face and the floor.

Floor-Level (A, C, D, E)

Most of the air flow is directed to the floor, with a small amount of the air being directed to the windshield and side window defrosters.

Floor & Defrost (A, C, D, E)

Most of the air flow is directed to the floor and the windshield with a small amount directed to the side window defrosters.

Defrost-Level (A, D)

Most of the air flow is directed to the windshield with a small amount of air directed to the side window defrosters.

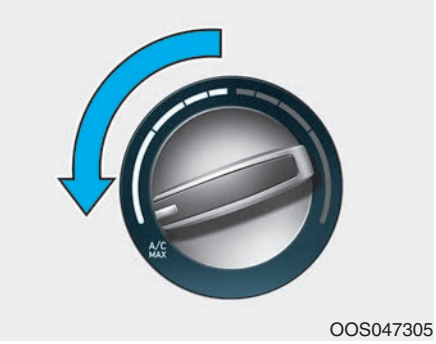

OOS047305

MAX A/C-Level (B, D) (if equipped)

The MAX A/C mode is used to cool the inside of the vehicle faster. Air flow is directed toward the upper body and face.

In this mode, the A/C button and the Recirculation mode button cannot be selected. Turn the fan speed mode to adjust.

After the interior cabin has cooled sufficiently, move the temperature knob away from the MAX A/C setting and adjust the knob to the desired position.

If you wish to continue using A/C ON, make sure the A/C button LED is illuminated.

Instrument panel vents

The instrument panel vent air flow can be directed up/down or left/right using the vent adjustment lever.

The air flow can also be CLOSED using the vent adjustment lever. The instrument panel air vents are the "click-to-close" type.

To CLOSE the instrument panel vents perform the following:

- For the driver side vents, slide the vent adjustment lever to the LEFT until it clicks.
- For the passenger side vents, slide the vent adjustment lever to the right until it clicks.

Temperature control (2)

The temperature will increase by turning the knob to the right.

The temperature will decrease by turning the knob to the left.

Air intake control (7)

The air intake control button is used to select either Fresh mode (outside air) or Recirculation mode (cabin air).

Recirculation mode

When Recirculation mode is selected, air from the passenger compartment will be recirculated through the system and heated or cooled according to the function selected.

Fresh mode

When Fresh mode is selected, air enters the vehicle from outside and is heated or cooled according to the function selected.

i Information

Using the system primarily in Fresh mode and Recirculation mode only when needed is recommended for best results.

Prolonged operation of the heater in Recirculation mode and without the A/C ON can cause fogging of the windshield.

In addition, prolonged use of the A/C ON in Recirculation mode may result in excessively dry, dehumidified air in the cabin.

⚠ WARNING

- **Continued use of the climate control system operation in Recirculation mode for a prolonged period of time may cause drowsiness to the occupants in the cabin. This may lead to loss of vehicle control which may lead to an accident.**
- **Continued use of the climate control system operation in Recirculation mode with the A/C OFF may allow humidity to increase inside the cabin. This may cause condensation to accumulate on the windshield and obscure visibility.**
- **Do not sleep in your vehicle or remain parked in your vehicle with the windows up and either the heater or the air conditioning ON for prolonged periods of time. Doing so may increase the levels of carbon dioxide in the cabin which may lead to serious injury or death.**

Fan speed control (1)

Turn the knob to the right to increase the fan speed and airflow. Turn the knob to the left to decrease fan speed and airflow.

Setting the fan speed control knob to the "0" position turns off the fan.

NOTICE

Operating the fan speed when the ignition switch is in the ON position could cause the battery to discharge. Operate the fan speed when the engine is running.

Air conditioning (5)

Push the A/C button to turn the system on (indicator light will illuminate) and off.

System Operation

Cooling / Ventilation

1. Select the Face Level mode.
2. Set the air intake control to fresh mode.
3. Set the temperature control to the desired position.
4. Set the fan speed control to the desired speed.

Heating

1. Select the Floor Level mode.
2. Set the air intake control to fresh mode.
3. Set the temperature control to the desired position.
4. Set the fan speed control to the desired speed.
5. If desired, turn the air conditioning ON with the temperature control knob set to heat in order to dehumidify the air before it enters into the cabin.

If the windshield fogs up, select the Floor & Defrost mode or press the Front Defrost mode.

Operation Tips

- To keep dust or unpleasant fumes from entering the vehicle through the ventilation system, temporarily set the air intake control to recirculation mode. Return the control to Fresh mode when the unpleasant air outside has diminished. This will help keep the driver alert and comfortable.
- To help prevent the inside of the windshield from fogging, set the air intake control to fresh mode and fan speed to the desired position, turn on the air conditioning system, and adjust the temperature control to the desired temperature.

Air conditioning

Your HYUNDAI vehicle air conditioning system is filled with R-1234yf refrigerant.

1. Start the engine.
2. Press the air conditioning button.
3. Set the mode to the Face Level mode.
4. Set the air intake control to Recirculation mode temporarily to allow the cabin to cool quickly. When the desired temperature in the cabin is reached, change the air intake control back to Fresh mode.
5. Adjust the fan speed control and temperature control to maintain maximum comfort.

When maximum cooling is desired, set the temperature control to the MAX A/C position, then set the fan speed control to the highest setting.

NOTICE

When using the air conditioning system, monitor the engine temperature gauge closely while driving up hills or in heavy traffic when outside temperatures are high. Air conditioning system operation when climbing a steep grade or in high outside ambient temperatures can cause engine overheating.

Continue to use the fan, but turn the air conditioning system off if the engine temperature gauge indicates engine overheating.

Air conditioning system operation tips

- If the vehicle has been parked in direct sunlight during hot weather, open the windows for a short time to let the hot air inside the vehicle escape.
- After sufficient cooling has been achieved, switch back from the recirculated air to the fresh outside air position.
- To help reduce moisture inside of the windows on rainy or humid days, decrease the humidity inside the vehicle by operating the air conditioning system with the windows and sunroof closed.
- Use the air conditioning system every month only for a few minutes to ensure maximum system performance.
- If you operate air conditioner excessively, the difference between the temperature of the outside air and that of the windshield could cause the outer surface of the windshield to fog up, causing loss of visibility. In this case, set the mode selection knob or button to the position and fan speed control to the lower speed.

System Maintenance

Cabin air filter

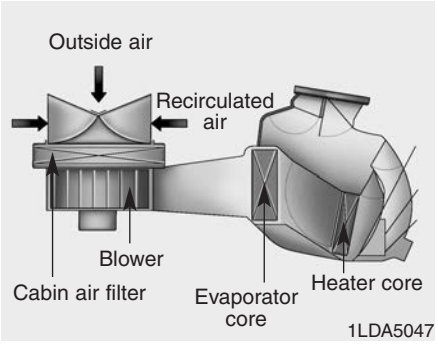

The cabin air filter is installed behind the glove box. It filters the dust or other pollutants that enter the vehicle through the heating and air conditioning system.

Have the cabin air filter replaced by an authorized HYUNDAI dealer according to the maintenance schedule. If the vehicle is being driven in severe conditions such as dusty or rough roads, more frequent cabin air filter inspections and changes are required.

If the air flow rate suddenly decreases, the system should be checked at an authorized HYUNDAI dealer.

Checking the amount of air conditioner refrigerant and compressor lubricant

When the amount of refrigerant is low, the performance of the air conditioning is reduced. Overfilling also reduces the performance of the air conditioning system.

Therefore, if abnormal operation is found, have the system inspected by an authorized HYUNDAI dealer.

NOTICE

It is important that the correct type and amount of oil and refrigerant is used. Otherwise, damage to the compressor and abnormal system operation may occur.

⚠ WARNING

Because the refrigerant is mildly inflammable at very high pressure, the air conditioning system should only be serviced by trained and certified technicians. It is important that the correct type and amount of oil and refrigerant is used. Otherwise, it may cause damage to the vehicle and personal injury.

The air conditioning system should be serviced by an authorized HYUNDAI dealer.

Air Conditioning refrigerant label

■ Example

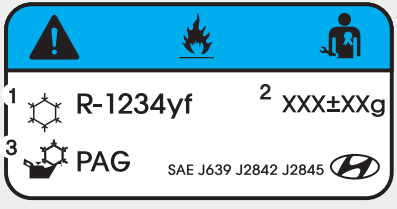

ODH043366

The actual Air Conditioning refrigerant label in the vehicle may differ from the illustration.

Each symbols and specification on air conditioning refrigerant label means as below :

1. Classification of refrigerant
2. Amount of refrigerant
3. Classification of Compressor lubricant

Refer to chapter 8 for more detail location of the air conditioning refrigerant label.

AUTOMATIC CLIMATE CONTROL SYSTEM

1. Temperature control knob
2. Fan speed control knob
3. AUTO (automatic control) button
4. Air conditioning button
5. OFF button
6. Front windshield defroster button
7. Mode selection button
8. Rear window defroster button
9. Air intake control button
10. Climate control information screen

OOS047301L

Automatic Temperature Control Mode

The Automatic Climate Control System is controlled by setting the desired temperature.

1. Press the AUTO button (3).

The modes, fan speeds, air intake and air-conditioning will be controlled automatically by the temperature setting you select.

2. Turn the temperature control knob (1) to the desired temperature. If the temperature is set to the lowest setting (Lo), the air conditioning system will operate continuously. After the interior has cooled sufficiently, adjust the knob to a higher temperature set point whenever possible.

To turn the automatic operation off, select any button of the following:

- Mode selection button
- Front windshield defroster button (Press the button one more time to deselect the front windshield defroster function. The 'AUTO' sign will illuminate on the information display once again.)
- Fan speed control button

The selected function will be controlled manually while other functions operate automatically.

For your convenience and to improve the efficiency of the climate control, use the AUTO button and set the temperature to 73°F (23°C).

To change the temperature unit from °F to °C or °C to °F:

Press and hold the AUTO and OFF buttons on the climate control unit for 3 seconds.

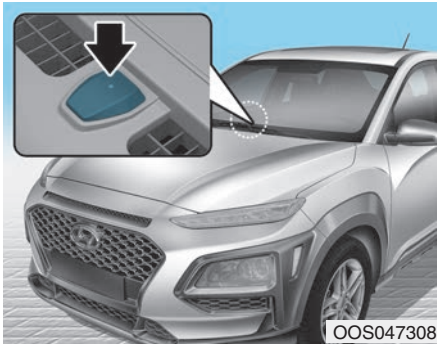

NOTICE

Never place anything near the ambient light/solar sensor to ensure better control of the heating and cooling system.

Manual Temperature Control Mode

The heating and cooling system can be controlled manually by pushing buttons other than the AUTO button. In this case, the system works sequentially according to the order of buttons selected.

When pressing any button except the AUTO button while using automatic operation, the functions not selected will be controlled automatically.

1. Start the engine.
2. Set the mode to the desired position.

   To improve the effectiveness of heating and cooling, select the mode according to the following:

   - Heating:
   - Cooling:
3. Set the temperature control to the desired position.
4. Set the air intake control to Fresh mode or Recirculation mode position.
5. Set the fan speed control to the desired speed.
6. If air conditioning is desired, turn the air conditioning system on.
7. Press the AUTO button to convert to full automatic control of the system.

Mode selection

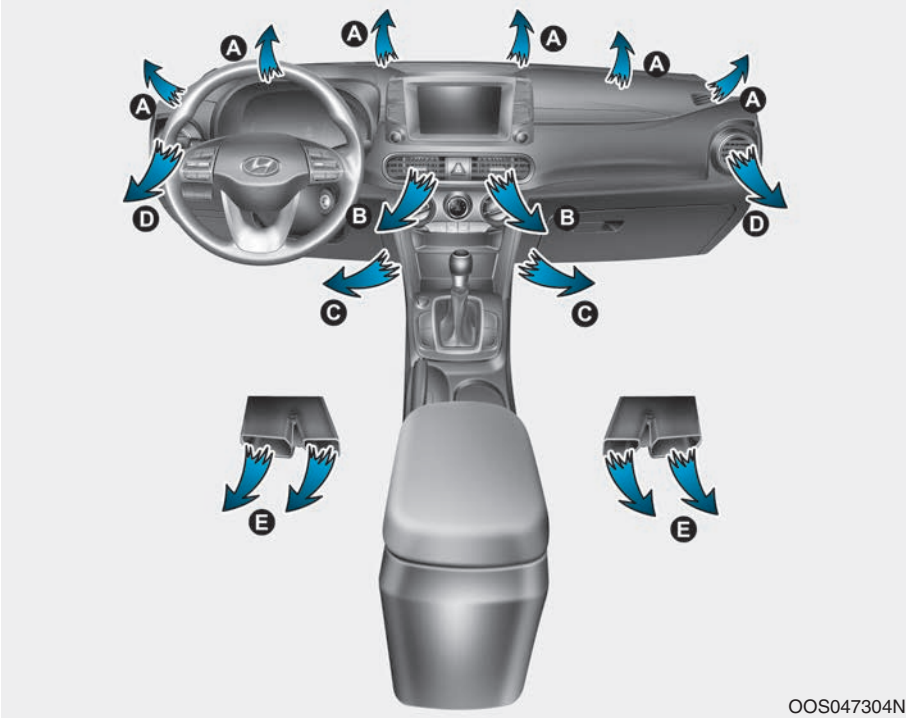

The mode selection button controls the direction of the air flow through the ventilation system.

The air flow outlet direction is cycled as follows:

Face-Level (B, D)

Air flow is directed toward the upper body and face. Additionally, each outlet can be controlled to direct the air discharged from the outlet.

Bi-Level (B, C, D, E)

Air flow is directed towards the face and the floor.

Floor & Defrost (A, C, D, E)

Most of the air flow is directed to the floor and the windshield with a small amount directed to the side window defrosters.

Floor-Level (A, C, D, E)

Most of the air flow is directed to the floor, with a small amount of the air being directed to the windshield and side window defrosters.

Defrost-Level (A, D) (6)

Most of the air flow is directed to the windshield with a small amount of air directed to the side window defrosters.

Instrument panel vents

The instrument panel vent air flow can be directed up/down or left/right using the vent adjustment lever.

The air flow can also be CLOSED using the vent adjustment lever. The instrument panel air vents are the "click-to-close" type.

To CLOSE the instrument panel vents perform the following:

- For the driver side vents, slide the vent adjustment lever to the LEFT until it clicks.
- For the passenger side vents, slide the vent adjustment lever to the right until it clicks.

Temperature control (1)

Turn the knob to the right to increase the temperature. Turn the knob to the left to decrease temperature.

The temperature will increase or decrease by 1°F/0.5°C for each incremental location. When set to the lowest temperature setting, the air conditioning will operate continuously.

Air intake control (9)

The air intake control button is used to select either Fresh mode (outside air) or Recirculation mode (cabin air).

Recirculation mode

When Recirculation mode is selected, air from the passenger compartment will be recirculated through the system and heated or cooled according to the function selected.

Fresh mode

When Fresh mode is selected, air enters the vehicle from outside and is heated or cooled according to the function selected.

Information

Using the system primarily in Fresh mode and Recirculation mode only when needed is recommended for best results.

Prolonged operation of the heater in Recirculation mode and without the A/C ON can cause fogging of the windshield.

In addition, prolonged use of the A/C ON in Recirculation mode may result in excessively dry, dehumidified air in the cabin.

⚠ WARNING

- **Continued use of the climate control system operation in Recirculation mode for a prolonged period of time may cause drowsiness to the occupants in the cabin. This may lead to loss of vehicle control which may lead to an accident.**
- **Continued use of the climate control system operation in Recirculation mode with the A/C OFF may allow humidity to increase inside the cabin. This may cause condensation to accumulate on the windshield and obscure visibility.**
- **Do not sleep in your vehicle or remain parked in your vehicle with the windows up and either the heater or the air conditioning ON for prolonged periods of time. Doing so may increase the levels of carbon dioxide in the cabin which may lead to serious injury or death.**

Fan speed control (2)

The fan speed can be set as desired by pushing the fan speed control button.

More air is delivered with higher fan speeds.

Pressing the OFF button turns off the fan.

Information

For better sound quality, fan speed may automatically slow down for a couple of minutes when you activate voice recognition or hands free.

NOTICE

Operating the fan when the ignition switch is in the ON position could cause the battery to discharge. Operate the fan when the engine is running.

Air conditioning (4)

Push the A/C button to manually turn the system on (indicator light will illuminate) and off.

OFF mode (5)

Push the OFF button to turn the climate control system off. You can still operate the mode and air intake buttons as long as the ignition switch is in the ON position.

System Operation

Cooling / Ventilation

1. Select the Face Level mode.
2. Set the air intake control to fresh mode.
3. Set the temperature control to the desired position.
4. Set the fan speed control to the desired speed.

Heating

1. Select the Floor Level mode.
2. Set the air intake control to fresh mode.
3. Set the temperature control to the desired position.
4. Set the fan speed control to the desired speed.
5. If desired, turn the air conditioning ON with the temperature control knob set to heat in order to dehumidify the air before it enters into the cabin.

If the windshield fogs up, select the Floor & Defrost mode or press the Front Defrost mode.

Operation Tips

- To keep dust or unpleasant fumes from entering the car through the ventilation system, temporarily set the air intake control to the recirculation mode. Return the control to the to Fresh mode when the unpleasant air outside has diminished. This will help keep the driver alert and comfortable.
- To help prevent the inside of the windshield from fogging, set the air intake control to fresh mode and the fan speed to the desired position, turn on the air conditioning system, and adjust the temperature control to the desired temperature.

Air conditioning

Your HYUNDAI vehicle air conditioning system is filled with R-1234yf refrigerant.

1. Start the engine.
2. Press the air conditioning button.
3. Set the mode to the Face Level mode.
4. Set the air intake control to Recirculation mode temporarily to allow the cabin to cool quickly. When the desired temperature in the cabin is reached, change the air intake control back to Fresh mode.
5. Adjust the fan speed control and temperature control to maintain maximum comfort.

When maximum cooling is desired, set the temperature control to the MAX A/C position, then set the fan speed control to the highest setting.

NOTICE

When using the air conditioning system, monitor the engine temperature gauge closely while driving up hills or in heavy traffic when outside temperatures. Air conditioning system operation when climbing a steep grade or in high outside ambient temperatures can cause engine overheating. Continue to use the fan, but turn the air conditioning system off if the engine temperature gauge indicates engine overheating.

Air conditioning system operation tips

- If the vehicle has been parked in direct sunlight during hot weather, open the windows for a short time to let the hot air inside the vehicle escape.
- After sufficient cooling has been achieved, switch back from the recirculated air to the fresh outside air position.

- To help reduce moisture inside of the windows on rainy or humid days, decrease the humidity inside the vehicle by operating the air conditioning system with the windows and sunroof closed.
- Use the air conditioning system every month only for a few minutes to ensure maximum system performance.
- If you operate air conditioner excessively, the difference between the temperature of the outside air and that of the windshield could cause the outer surface of the windshield to fog up, causing loss of visibility. In this case, set the mode selection knob or button to the position and fan speed control to the lower speed.

System Maintenance

Cabin air filter

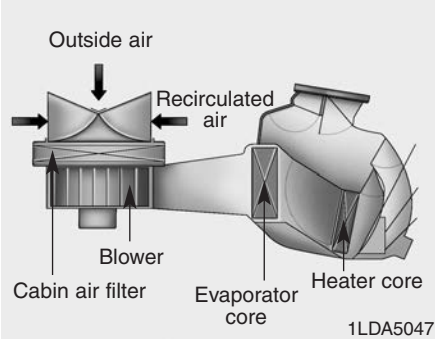

The cabin air filter is installed behind the glove box. It filters the dust or other pollutants that enter the vehicle through the heating and air conditioning system.

Have the The cabin air filter replaced by an authorized HYUNDAI dealer according to the maintenance schedule. If the vehicle is being driven in severe conditions such as dusty or rough roads, more frequent cabin air filter inspections and changes are required.

If the air flow rate suddenly decreases, the system should be checked at an authorized HYUNDAI dealer.

Checking the amount of air conditioner refrigerant and compressor lubricant

When the amount of refrigerant is low, the performance of the air conditioning is reduced. Overfilling also reduces the performance of the air conditioning system.

Therefore, if abnormal operation is found, have the system inspected by an authorized HYUNDAI dealer.

NOTICE

It is important that the correct type and amount of oil and refrigerant is used. Otherwise, damage to the compressor and abnormal system operation may occur.

⚠ WARNING

Because the refrigerant is mildly inflammable at very high pressure, the air conditioning system should only be serviced by trained and certified technicians. It is important that the correct type and amount of oil and refrigerant is used. Otherwise, it may cause damage to the vehicle and personal injury.

The air conditioning system should be serviced by an authorized HYUNDAI dealer.

Air Conditioning refrigerant label

■ Example

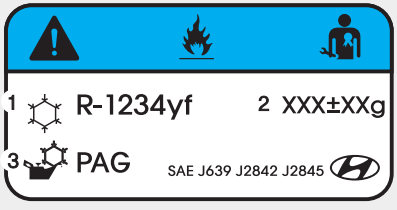

ODH043366

The actual Air Conditioning refrigerant label in the vehicle may differ from the illustration.

Each symbols and specification on air conditioning refrigerant label means as below :

1. Classification of refrigerant
2. Amount of refrigerant
3. Classification of Compressor lubricant

Refer to chapter 8 for more detail location of the air conditioning refrigerant label.

WINDSHIELD DEFROSTING AND DEFOGGING

⚠ WARNING

Windshield heating

Do not use the or position during cooling operation in extremely humid weather. The difference between the temperature of the outside air and that of the windshield could cause the outer surface of the windshield to fog up, causing loss of visibility could cause an accident resulting in serious injury or death. In this case, set the mode selection knob or button to the position and fan speed control knob or button to a lower speed.

- For maximum defrost performance, set the temperature control knob to the highest temperature setting (rotated all the way to the right) and the fan speed control to the highest setting.
- If warm air to the floor is desired while defrosting or defogging, set the mode to the floor-defrost position.
- Before driving, clear all snow and ice from the windshield, rear window, side view mirrors, and all side windows.
- Clear all snow and ice from the hood and air inlet in the cowl grill to improve heater and defroster efficiency and to reduce the probability of fogging up the inside of the windshield.

NOTICE

If the engine temperature is still cold after starting, then a brief engine warm up period may be required for the vented air flow to become warm or hot.

Manual Climate Control System

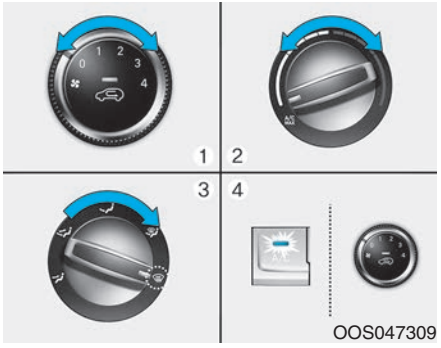

To defog inside windshield

1. Select any fan speed except "0" position.
2. Select the desired temperature.
3. Select the or position.
4. Fresh mode will be selected automatically. Additionally, the air conditioning will automatically operate if the mode is selected to the position.

Check to make sure the A/C is ON. If the A/C ON LED is not illuminated, press the A/C button once to turn the air conditioner ON.

Check to make sure the air intake control is in Fresh mode. If the air intake control LED is illuminated, press the button once to enable Fresh mode (LED OFF).

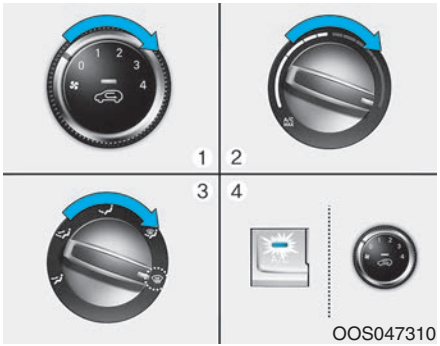

To defrost outside windshield

1. Set the fan speed to the highest setting (knob rotated all the way to the right).
2. Set the temperature control to the highest temperature setting.
3. Select the position.
4. Fresh mode (Recirculation OFF) and A/C ON will automatically be selected.

Automatic Temperature Control System (if equipped)

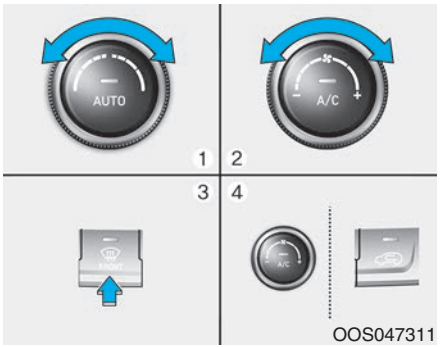

To defog inside windshield

1. Select the desired fan speed.
2. Select the desired temperature.
3. Press the defroster button ( ).
4. Fresh mode will be selected automatically.

Check to make sure the air intake control is in Fresh mode. If the air intake control LED is illuminated, press the button once to enable Fresh mode (LED OFF).

If the position is selected, the fan speed is automatically increased.

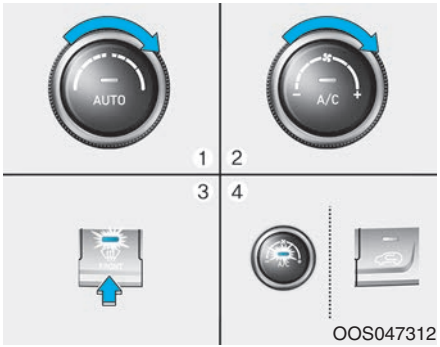

To defrost outside windshield

1. Set the fan speed to the highest (extreme right) position.
2. Set the temperature to the extreme hot (HI) position.
3. Press the defroster button ( ).
4. The outside (fresh) air position will be selected automatically.

If the position is selected, lower fan speed is adjusted to a higher fan speed.

Defogging logic

To reduce the probability of fogging up the inside of the windshield, the air intake or air conditioning are controlled automatically according to certain conditions such as or positions. To cancel or reset the defogging logic, do the following.

Manual climate control system

1. Turn the ignition switch to the ON position.
2. Press the defroster button ( ).
3. Press the air intake control button at least 5 times within 3 seconds.

The LED indicator on the A/C ON button will blink 3 times to indicate that the defogging logic has been disabled.

Repeat the steps again to re-enable the defogging logic.

If the battery has been discharged or disconnected, it resets to the defog logic status.

Automatic climate control system

1. Turn the ignition switch to the ON position.
2. Press the defroster button ( ).
3. While pressing the air conditioning button (A/C), press the air intake control button at least 5 times within 3 seconds.

The Automatic Temperature Control information screen will blink 3 times to indicate that the defogging logic has been disabled.

Repeat the steps again to re-enable the defogging logic.

If the battery has been discharged or disconnected, it resets to the defog logic status.

Auto Defogging System (Additional Feature with Automatic Temperature Control System)

Auto defogging reduces the possibility of fogging up the inside of the windshield by automatically sensing the moisture on inside the windshield.

The auto defogging system operates when the heater or air conditioning is on.

Information

The auto defogging system may not operate normally, when the outside temperature is below 50 °F (-10 °C).

When the Auto Defogging System operates, the indicator will illuminate.

If a high amount of humidity is detected in the vehicle, the Auto Defogging System will be enabled. The following steps will be performed automatically:

Step 1) The air intake control will change to Fresh mode.

Step 2) The A/C button will turn ON.

Step 3) The mode will be changed to defrost to direct airflow to the windshield.

Step 4) The fan speed will be set to MAX.

If the air conditioning is off or recirculated air position is manually selected while Auto Defogging System is ON, the Auto Defogging System Indicator will blink 3 times to signal that the manual operation has been canceled.

To cancel or reset the Auto Defogging System

Press the front windshield defroster button for 3 seconds when the ignition switch is in the ON position. When the Auto Defogging System is canceled, the ADS OFF symbol will blink 3 times and ADS OFF will be displayed on the climate control information screen.

When the Auto Defogging System is reset, the ADS OFF symbol will blink 6 times without a signal.

Information

- **When the air conditioning is turned on by Auto defogging system, if you try to turn off the air conditioning, the indicator will blink 3 times and the air conditioning will not be turned off.**
- **To maintain the effectiveness and efficiency of the Auto Defogging System, do not select Recirculation mode while the system is operating.**
- **When the Auto Defogging System is operating, the fan speed adjustment knob, the temperature adjustment knob, and the air intake control button are all disabled.**

NOTICE

Do not remove the sensor cover located on the upper end of the windshield glass.

Damage to system parts could occur and may not be covered by your vehicle warranty.

Rear Window Defroster

NOTICE

To prevent damage to the rear window defroster conducting elements bonded to the inside surface of the rear window, never use sharp instruments or window cleaners containing abrasives to clean the window.

If you want to defrost and defog the front windshield, refer to the "Windshield Defrosting and Defogging" section in this chapter.

■ Manual climate control system

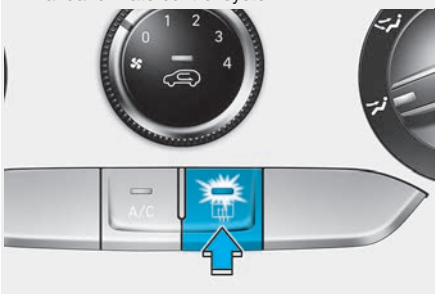

OOS047302L

■ Automatic climate control system

OOS047303L

The defroster heats the window to remove frost, fog and thin ice from the interior and exterior of the rear window, while the engine is running.

- To activate the rear window defroster, press the rear window defroster button located in the center control panel. The indicator on the rear window defroster button illuminates when the defroster is ON.
- To turn off the defroster, press the rear window defroster button again.

Information

- **If there is heavy accumulation of snow on the rear window, brush it off before operating the rear defroster.**
- **The rear window defroster automatically turns off after approximately 20 minutes or when the ignition switch is in the LOCK/OFF position.**

Side view mirror defroster

If your vehicle is equipped with the side view mirror defrosters, they will operate at the same time you turn on the rear window defroster.

CLIMATE CONTROL ADDITIONAL FEATURES (IF EQUIPPED)

Cluster ionizer

When the ignition switch is in the ON position, the clean air function turns on automatically.

Also, the clean air function turns off automatically, when the ignition switch is in the OFF position.

Automatic Ventilation

When the ignition switch is in the ON position or when the engine is running and temperature is below 59°F (15°C) with the recirculation mode selected more than five minutes, the air intake position will automatically change to fresh mode.

To cancel or reset the Automatic Ventilation

When the air conditioning system is on, press the mode selection button and the recirculation mode button five times within three seconds.

When the Automatic Ventilation feature is enabled, the Recirculation button LED indicator will blink 6 times.

When the Automatic Ventilation feature is disabled, the Recirculation button LED indicator will blink 3 times.

Sunroof Inside Air Recirculation

When the heater or air conditioning system is on with the sunroof opened, the fresh mode will be automatically selected. If you press the Recirculation mode button with the sunroof open, Recirculation mode activate but will only remain enabled for 3 minutes. After 3 minutes the air intake control will revert back to Fresh mode.

When the sunroof is closed, the air intake position will return to the original position that was selected.

STORAGE COMPARTMENT

⚠ WARNING

Never store cigarette lighters, propane cylinders, or other flammable/explosive materials in the vehicle. These items may catch fire and/or explode if the vehicle is exposed to hot temperatures for extended periods.

⚠ WARNING

ALWAYS keep the storage compartment covers closed securely while driving. Items inside your vehicle are moving as fast as the vehicle. If you have to stop or turn quickly, or if there is a crash, the items may fly out of the compartment and may cause an injury if they strike the driver or a passenger.

NOTICE

To avoid possible theft, do not leave valuables in the storage compartments.

Center Console Storage

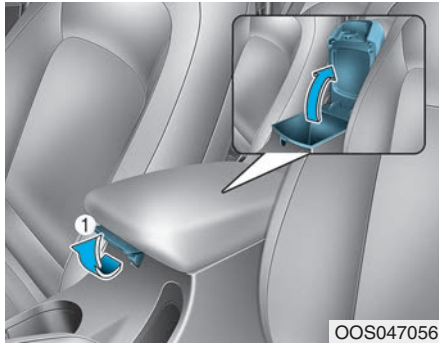

OOS047056

To open :

Grab and hold the latch (1) on the arm rest then lift the lid.

Glove Box

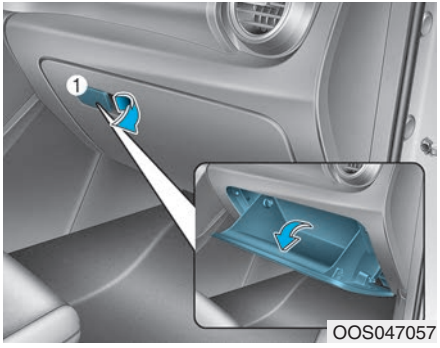

OOS047057

To open:

Pull the lever (1).

⚠ WARNING

ALWAYS close the glove box door after use.

An open glove box door can cause serious injury to the passenger in an accident, even if the passenger is wearing a seat belt.

Sunglass Holder

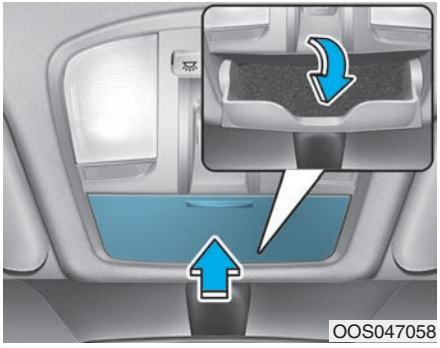

To open:

Push and release the cover and the holder will slowly open. Place your sunglasses in the compartment door with the lenses facing out.

To close:

Push back into position.

Make sure the sunglass holder is closed while driving.

⚠ WARNING

- **Do not keep objects except sunglasses inside the sunglass holder. Such objects can be thrown from the holder in the event of a sudden stop or an accident, possibly injuring the passengers in the vehicle.**
- **Do not open the sunglass holder while the vehicle is moving. The rear view mirror of the vehicle can be blocked by an open sunglass holder.**
- **Do not put the glasses forcibly into a sunglass holder. It may cause personal injury if you try to open it forcibly when the glasses are jammed in holder.**

Multi Box

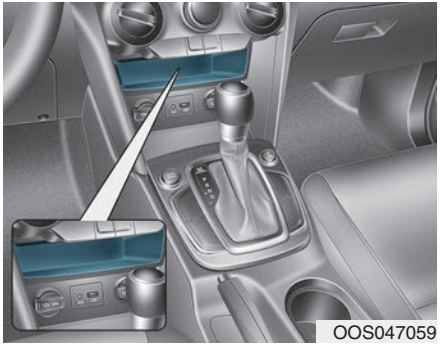

Small things may be placed in the multi box.

⚠ WARNING

Do not keep objects that can be thrown from the multi box and severely injure passengers in the vehicle in the event of a sudden stop or an accident.

INTERIOR FEATURES

Cup Holder

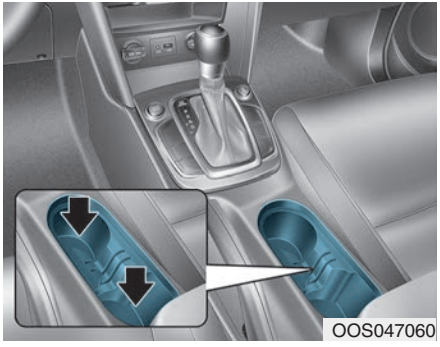

Cups or small beverages cups may be placed in the cup holders.

Rear

Pull the armrest down to use the cup holders.

⚠ WARNING

- **Avoid abrupt starting and braking when the cup holder is in use to prevent spilling your drink. If hot liquid spills, you could be burned. Such a burn to the driver could cause loss of vehicle control resulting in an accident.**
- **Do not place uncovered or unsecured cups, bottles, cans, etc., in the cup holder containing hot liquid while the vehicle is in motion. Injuries may result in the event of a sudden stop or collision.**
- **Only use soft cups in the cup holders. Hard objects can injure you in an accident.**

⚠ WARNING

Keep cans or bottles out of direct sun light and do not put them in a hot vehicle. It may explode.

NOTICE

- **Keep your drinks sealed while driving to prevent spilling your drink. If liquid spills, it may get into the vehicle's electrical/electronic system and damage electrical/electronic parts.**
- **When cleaning spilled liquids do not use hot air to blow out or dry the cup holder. This may damage the interior.**

Sunvisor

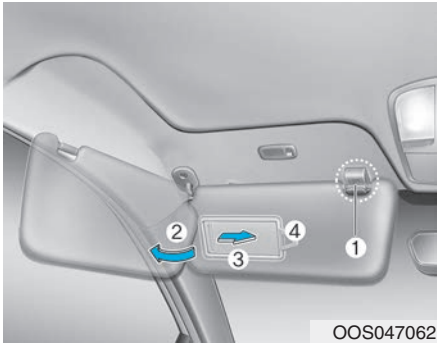

To use the sunvisor, pull it downward.

To use the sunvisor to block the sun from the side window, pull it downward, release it from the bracket (1) and swing it to the side (2) towards the window.

To use the vanity mirror, pull down the sunvisor and slide the mirror cover (3).

Adjust the sunvisor forward or backward (4) as needed (if equipped).

NOTICE

Close the vanity mirror cover securely and return the sunvisor to its original position after use.

⚠ WARNING

For your safety, do not block your view when using the sunvisor.

NOTICE

Do not put several tickets in the ticket holder at one time. This could cause damage to the ticket holder.

Power Outlet

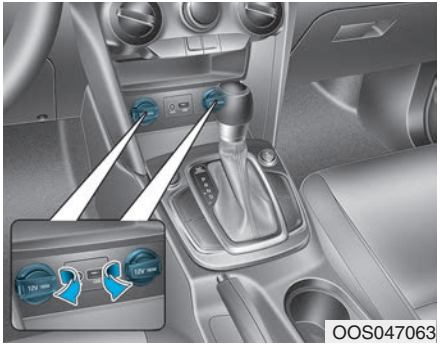

The power outlet is designed to provide power for mobile telephones or other devices designed to operate with vehicle electrical systems. The devices should draw less than 180 W with the engine running.

⚠ WARNING

Avoid electrical shocks. Do not place your fingers or foreign objects (pin, etc.) into a power outlet or touch the power outlet with a wet hand.

NOTICE

To prevent damage to the Power Outlets :

- **Use the power outlet only when the engine is running and remove the accessory plug after use. Using the accessory plug for prolonged periods of time with the engine off could cause the battery to discharge.**
- **Only use 12V electric accessories which are less than 180 W in electric capacity.**
- **Adjust the air-conditioner or heater to the lowest operating level when using the power outlet.**
- **Close the cover when not in use.**
- **Some electronic devices can cause electronic interference when plugged into a vehicle's power outlet. These devices may cause excessive audio static and malfunctions in other electronic systems or devices used in your vehicle.**
- **Push the plug in as far as it will go. If good contact is not made, the plug may overheat and the fuse may open.**
- **Plug in battery equipped electrical/electronic devices with reverse current protection. The current from the battery may flow into the vehicle's electrical/electronic system and cause system malfunction.**

Wireless Cellular Phone Charging System (if equipped)

On certain models, the vehicle comes equipped with a wireless cellular phone charger.

The system is available when all doors are closed, and when the ignition switch is in the ACC/ON position.

To charge a cellular phone

The wireless cellular phone charging system charges only the Qi-enabled cellular phones (Qi). Read the label on the cellular phone accessory cover or visit your cellular phone manufacturer's website to check whether your cellular phone supports the Qi technology.

The wireless charging process starts when you put a Qi-enabled cellular phone on the wireless charging unit.

1. Remove other items, including the smart key, from the wireless charging unit. If not, the wireless charging process may be interrupted. Place the cellular phone on the center of the charging pad.
2. The indicator light is orange when the cellular phone is charging. The indicator light turns green when phone charging is complete.
3. You can turn ON or OFF the wireless charging function in the user settings mode on the instrument cluster. For further information, refer to the "LCD Display Modes" in this chapter.

If your cellular phone is not charging:

- Slightly change the position of the cellular phone on the charging pad.
- Make sure the indicator light is orange.

The indicator light will blink orange for 10 seconds if there is a malfunction in the wireless charging system.

In this case, temporarily stop the charging process, and re-attempt to charge your cellular phone again.

The system warns you with a message on the LCD display if the cellular phone is still on the wireless charging unit after the engine is turned OFF and the front door is opened.

NOTICE

- The wireless cellular phone charging system may not support certain cellular phones, which are not verified for the Qi specification (Qi).
- When placing your cellular phone on the charging mat, position the phone in the middle of the mat for optimal charging performance. If your cell phone is off to the side, the charging rate may be less and in some cases the cell phone may experience higher heat conduction.
- In some cases, the wireless charging may stop temporarily when the Smart Key is used, either when starting the vehicle or locking/unlocking the doors, etc.
- When charging certain cellular phones, the charging indicator may not change to green when the cell phone is fully charged.
- The wireless charging process may temporarily stop, when temperature abnormally increases inside the wireless cellular phone charging system. The wireless charging process restarts, when temperature falls to a certain level.
- The wireless charging process may temporarily stop when there is any metallic item, such as a coin, between the wireless cellular phone charging system and cellular phone.
- When charging some cell phones with the case still applied, the wireless charging speed may decrease and the wireless charging may stop.
- If the cellular phone has a thick cover, the wireless charging may not be possible.
- If the cell phone is not completely contacting the charging pad, wireless charging may not operate properly.
- Some magnetic items like credit cards, phone cards or rail tickets may be damaged if left with the cellular phone during the charging process.
- If the cellular phone without the wireless charging function or the metallic items are placed on the charging pad, it may cause slight noise. This noise does not affect the cellular phone and the vehicle, because this noise is an operating sound during determining the item on the charging pad.
- If the ignition switch is OFF, the charging also stops.

Clock

⚠ WARNING

Do not attempt to adjust the clock while driving. Doing so may result in distracted driving which may lead to an accident involving personal injury or death.

Vehicles with Audio system

Select the **[SETUP]** button on the audio system ➟ Select [Date/Time].

- Set time: Set the time displayed on the audio screen.
- Time format: Choose between 12-hour and 24-hour time formats.

Vehicles with Navigation system

Select the Settings menu on the Navigation system ➟ Select [Date/Time].

- GPS time: Displays time according to the received GNSS time.
- 24-hour: Switches to 12 hour or 24 hour.

Clothes Hanger

OOS047065

These hangers are not designed to hold large or heavy items.

⚠ WARNING

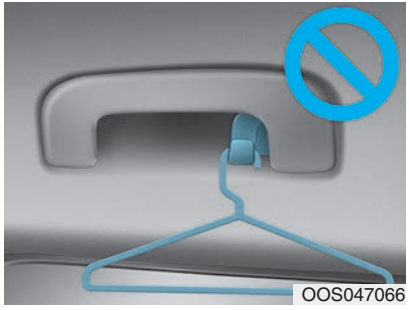
OOS047066

Do not hang other objects such as hangers or hard objects except clothes. Also, do not put heavy, sharp or breakable objects in the clothes pockets. In an accident or when the curtain air bag is inflated, it may cause vehicle damage or personal injury.

Floor Mat Anchor(s)

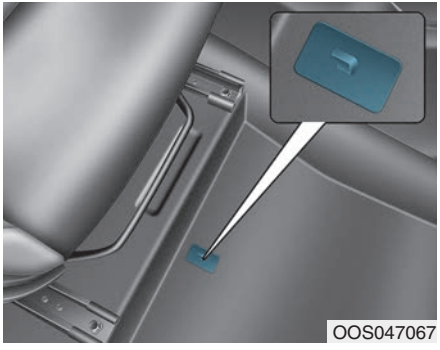
OOS047067

ALWAYS use the Floor Mat Anchors to attach the front floor mats to the vehicle. The anchors on the front floor carpet keep the floor mats from sliding forward.

⚠ WARNING

Do not overlay additional mats or liners over the floor mats. If using All Weather mats, remove the carpeted floor mats before installing them. Only use floor mats designed to connect to the anchors.

⚠ WARNING

The following must be observed when installing ANY floor mat to the vehicle.

- **Ensure that the floor mats are securely attached to the vehicle's floor mat anchor(s) before driving the vehicle.**
- **Do not use ANY floor mat that cannot be firmly attached to the vehicle's floor mat anchors.**
- **Do not stack floor mats on top of one another (e.g. all-weather rubber mat on top of a carpeted floor mat). Only a single floor mat should be installed in each position.**

IMPORTANT - Your vehicle was manufactured with driver's side floor mat anchors that are designed to securely hold the floor mat in place. To avoid any interference with pedal operation, HYUNDAI recommends that the HYUNDAI floor mat designed for use in your vehicle be installed.

Luggage Net Holder (if equipped)

OOS047068N

To keep items from shifting in the luggage compartment, you can use the 4 holders located in the luggage board to attach the luggage net.

Make sure the luggage net is securely attached to the holders in the luggage board.

⚠ WARNING

Avoid eye injury. DO NOT over-stretch the luggage net. ALWAYS keep your face and body out of the luggage net's recoil path. DO NOT use the luggage net when the strap has visible signs of wear or damage.

Use the luggage net to keep only light items from shifting in the luggage compartment.

Cargo Area Cover

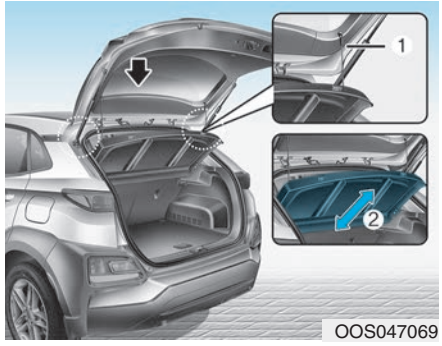

Use the cover to hide items stored in the cargo area.

The cargo area cover will lift when the liftgate is opened.

Disconnect the strap (1) from the holder if you want to return the cover to the original position. To remove the cargo area cover completely, lift the cover to a 50-degree angle and pull it out (2).

NOTICE

Since the cargo area cover may be damaged or deformed, do not put luggage on it when it is being used.

⚠ WARNING

- **Do not place objects on the cargo area cover while driving. Such objects may be thrown about inside the vehicle and possibly injure vehicle occupants during an accident or when braking.**
- **Never allow anyone to ride in the luggage compartment. It is designed for luggage only.**
- **Maintain balance of the vehicle and locate the weight as far forward as possible.**

Luggage tray (if equipped)

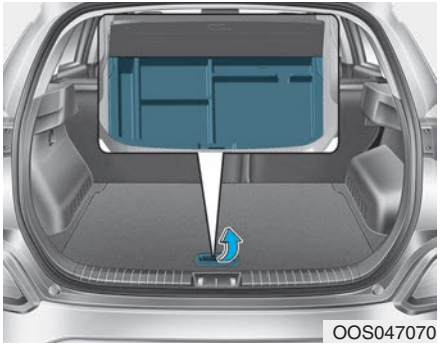
OOS047070

You can place a first aid kit, a reflector triangle (front tray), tools, etc. in the box for easy access.

- Grasp the handle on the top of the cover and lift it.

To increase luggage space

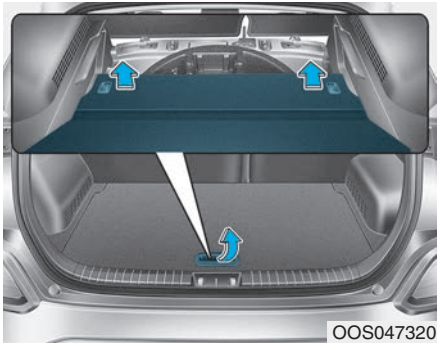
OOS047320

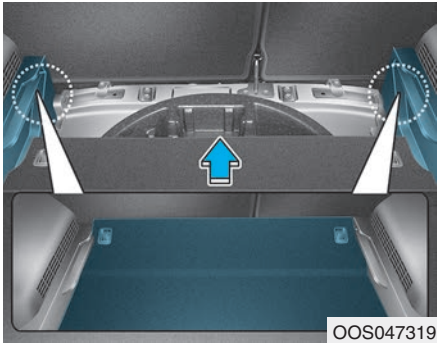
OOS047319

1. Grasp the handle on the top of the cover and pull out the luggage tray board backwards.
2. Pull out the luggage tray board completely and remove the luggage tray.(If the luggage tray is equipped.)
3. Push the luggage tray board forwards into the lower sliding slot.

EXTERIOR FEATURES

Roof Side Rails (if equipped)

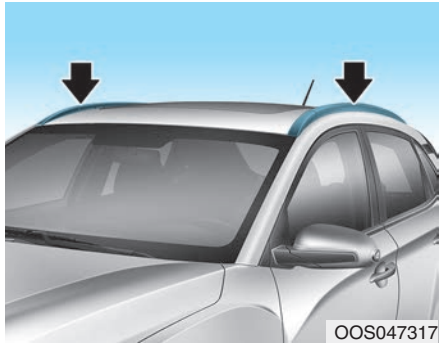

If your vehicle comes equipped with roof side rails, then roof rack crossbars can be installed on top of your vehicle.

The roof rack crossbars are an accessory and are available at your local HYUNDAI dealer.

NOTICE

If the vehicle is equipped with a sunroof, be sure not to position cargo onto the roof rack in such a way that it could interfere with sunroof operation.

NOTICE

- **When carrying cargo on the roof rack, take the necessary precautions to make sure the cargo does not damage the roof of the vehicle.**
- **When carrying large objects on the roof rack, make sure they do not exceed the overall roof length or width.**

⚠ WARNING

- **The following specification is the maximum weight that can be loaded onto the roof rack. Distribute the load as evenly as possible onto the roof rack and secure the load firmly.**

  Loading cargo or luggage in excess of the specified weight limit on the roof rack may damage your vehicle.

ROOF RACK	176 lbs. (80kg) EVENLY DISTRIBUTED

- **The vehicle center of gravity will be higher when items are loaded onto the roof rack. Avoid sudden starts, braking, sharp turns, abrupt maneuvers or high speeds that may result in loss of vehicle control or rollover resulting in an accident.**
- **Always drive slowly and turn corners carefully when carrying items on the roof rack. Severe wind updrafts, caused by passing vehicles or natural causes, can cause sudden upward pressure on items loaded on the roof rack. This is especially true when carrying large, flat items such as wood panels or mattresses. This could cause the items to fall off the roof rack and cause damage to your vehicle or others around you.**
- **To prevent damage or loss of cargo while driving, check frequently before or while driving to make sure the items on the roof rack are securely fastened.**

Multimedia System

Multimedia System.....4-2
AUX, USB and iPod® Port 4-2
Antenna 4-2
Steering Wheel Audio Controls.....4-3
Bluetooth® Wireless Technology Hands-Free.....4-4
Audio (Display Audio) / Video /
Navigation System (AVN).....4-4

MULTIMEDIA SYSTEM

NOTICE

- **If you install an aftermarket HID head lamp, your vehicle's audio and electronic devices may not function properly.**
- **Prevent chemicals such as perfume, cosmetic oil, sun cream, hand cleaner, and air freshener from contacting the interior parts because they may cause damage or discoloration.**

AUX, USB and iPod® Port

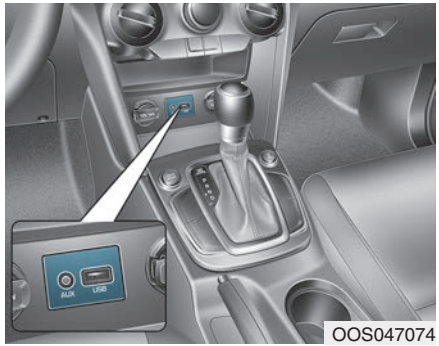

OOS047074

You can use an AUX or USB cable to connect audio devices to the vehicle AUX or USB port.

Information

When using a portable audio device connected to the power outlet, noise may occur during playback. If this happens, use the portable audio device's power source.

❊ iPod® is a trademark of Apple Inc.

Antenna

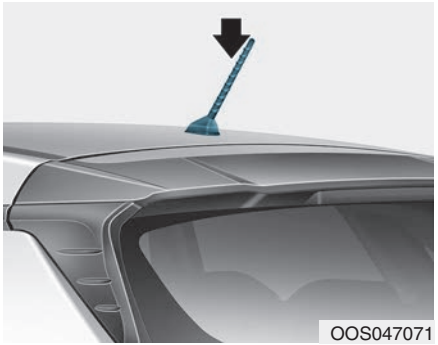
OOS047071

The roof antenna receives transmitted data. (For example : AM/FM) Rotate the roof antenna in a counterclockwise direction to remove it.

Steering Wheel Audio Control

■ Type A

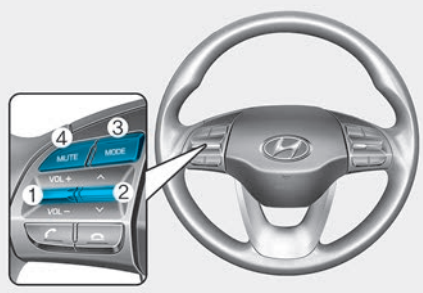

OOS047072

■ Type B

OOS047073

NOTICE

Do not operate multiple audio remote control buttons simultaneously.

VOLUME (VOL + / -) (1)

- Press the VOLUME switch up to increase volume.
- Press the VOLUME switch down to decrease volume.

SEEK/PRESET (∧ / ∨) (2)

If the SEEK/PRESET switch is pressed up or down and held for 0.8 second or more, it will function in the following modes:

RADIO mode

It will function as the AUTO SEEK select button. It will SEEK until you release the button.

MEDIA mode

It will function as the FF/RW button.

If the SEEK/PRESET switch is pressed up or down, it will function in the following modes:

RADIO mode

It will function as the PRESET STATION UP/DOWN button.

MEDIA mode

It will function as the TRACK UP/DOWN button.

MODE (3)

Press the MODE button to toggle through Radio, SXM, or AUX modes.

MUTE (🔇) (4)

- Press the MUTE button to mute the sound.
- Press the MUTE button again to activate the sound.

i Information

Detailed information for audio control buttons are described in the separately supplied manual with the vehicle.

Bluetooth® Wireless Technology Hands-Free

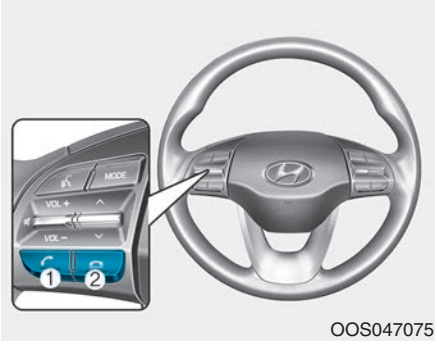

OOS047075

OOS047076

With the *Bluetooth*® Wireless Technology in the vehicle, you can use the phone wireless.

(1) Call / Answer button

(2) Call end button

(3) Microphone

Detailed information for the *Bluetooth*® Wireless Technology hands-free is described in the Car Multimedia User's Manual.

Audio (Display Audio) / Video / Navigation System (AVN) (if equipped)

Detailed information for the AVN system is described in the Car Multimedia User's Manual.

Driving your vehicle

Before driving....5-4
Before Entering the Vehicle....5-4
Before Starting....5-4
Ignition switch....5-6
Key Ignition Switch....5-6
Engine Start/Stop Button....5-9
Automatic Transmission....5-14
Automatic Transmission Operation....5-14
Good Driving Practices....5-18
Dual clutch transmission....5-20
Dual Clutch Transmission Operation....5-20
Good Driving Practices....5-27
Braking system....5-29
Power Brakes....5-29
Disc Brakes Wear Indicator....5-30
Parking Brake....5-30
Anti-lock Brake System (ABS)....5-32
Electronic Stability Control (ESC)....5-34
Vehicle Stability Management (VSM)....5-36
Hill-Start Assist Control (HAC)....5-37
Downhill Brake Control (DBC)....5-37
Good Braking Practices....5-39
All Wheel Drive (AWD)....5-40
AWD operation....5-41
Emergency precautions....5-44
Drive Mode Integrated Control System....5-46
Blind-spot Collision Warning (BCW) system....5-47
BCW (Blind-spot Collision Warning)....5-48
RCCW (Rear Cross-Traffic Collision Warning)....5-50
Detecting sensor....5-52
Limitations of the System....5-53
Forward Collision-avoidance Assist (FCA) system....5-55
System Setting and Activation....5-55
FCA Warning Message and System Control....5-57
FCA Sensor....5-59
System Malfunction....5-60
Limitations of the System....5-62
Lane Keeping Assist (LKA) system....5-67
LKA system Operation....5-68
Warning Light and Message....5-72
Limitations of the System....5-73
LKA system Function Change....5-74
Driver Attention Warning (DAW) system....5-75
System Setting and Activation....5-75
Resetting the System....5-76
System Standby....5-77
System Malfunction....5-77
Cruise control....5-79
Cruise Control operation....5-79

Special driving conditions.....5-84
Hazardous Driving Conditions.....5-84
Rocking the Vehicle.....5-84
Smooth Cornering.....5-85
Driving at Night.....5-85
Driving in the Rain.....5-85
Driving in Flooded Areas.....5-86
Highway Driving.....5-86
Reducing the risk of a rollover.....5-87
Winter driving.....5-88
Snow or Icy Conditions.....5-88
Winter Precautions.....5-90
Vehicle load limit.....5-92
Tire Loading Information Label.....5-93
Trailer towing.....5-97

⚠ WARNING

Carbon monoxide (CO) gas is toxic. Breathing CO can cause unconsciousness and death.

Engine exhaust contains carbon monoxide which cannot be seen or smelled.

Do not inhale engine exhaust.

If at any time you smell engine exhaust inside the vehicle, open the windows immediately. Exposure to CO can cause unconsciousness and death by asphyxiation.

Be sure the exhaust system does not leak.

The exhaust system should be checked whenever the vehicle is raised to change the oil or for any other purpose. If you hear a change in the sound of the exhaust or if you drive over something that strikes the underneath side of the vehicle, have the exhaust system checked as soon as possible by an authorized HYUNDAI dealer.

Do not run the engine in an enclosed area.

Letting the engine idle in your garage, even with the garage door open, is a hazardous practice. Run the engine only long enough to start the engine and to move the vehicle out of the garage.

Avoid idling the engine for prolonged periods with people inside the vehicle.

If it is necessary to idle the engine for a prolonged period with people inside the vehicle, be sure to do so only in an open area with the air intake set at "Fresh" and fan control set to high so fresh air is drawn into the interior.

Keep the air intakes clear.

To assure proper operation of the ventilation system, keep the ventilation air intakes located in front of the windshield clear of snow, ice, leaves, or other obstructions.

If you must drive with the liftgate open:

Close all windows.

Open instrument panel air vents.

Set the air intake control at "Fresh", the air flow control at "Floor" or "Face", and the fan control set to high.

⚠ WARNING

CALIFORNIA PROPOSITION 65 WARNING

Engine exhaust and a wide variety of automobile components including components found in the interior furnishings in a vehicle, contain or emit harmful chemicals known to the State of California to cause cancer and birth defects and reproductive harm. In addition, certain fluids contained in vehicles and certain products of components contain or emit chemicals known to the State of California to cause cancer and birth defects or other reproductive harm.

BEFORE DRIVING

Before Entering the Vehicle

- Be sure all windows, outside mirror(s), and outside lights are clean and unobstructed.
- Remove frost, snow, or ice.
- Visually check the tires for uneven wear and damage.
- Check under the vehicle for any sign of leaks.
- Be sure there are no obstacles behind you if you intend to back up.

Before Starting

- Make sure the hood, the liftgate, and the doors are securely closed and locked.
- Adjust the position of the seat and steering wheel.
- Adjust the inside and outside rearview mirrors.
- Verify all the lights work.
- Fasten your seatbelt. Check that all passengers have fastened their seatbelts.
- Check the gauges and indicators in the instrument panel and the messages on the instrument display when the ignition switch is in the ON position.
- Check that any items you are carrying are stored properly or fastened down securely.

⚠ WARNING

To reduce the risk of SERIOUS INJURY or DEATH, take the following precautions:

- ALWAYS wear your seat belt. All passengers must be properly belted whenever the vehicle is moving. For more information, refer to "Seat Belts" in chapter 2.
- Always drive defensively. Assume other drivers or pedestrians may be careless and make mistakes.
- Stay focused on the task of driving. Driver distraction can cause accidents.
- Leave plenty of space between you and the vehicle in front of you.

⚠ WARNING

NEVER drink or take drugs and drive.

Drinking or taking drugs and driving is dangerous and may result in an accident and SERIOUS INJURY or DEATH.

Drunk driving is the number one contributor to the highway death toll each year. Even a small amount of alcohol will affect your reflexes, perceptions and judgment. Just one drink can reduce your ability to respond to changing conditions and emergencies and your reaction time gets worse with each additional drink.

Driving while under the influence of drugs is as dangerous or more dangerous than driving under the influence of alcohol.

You are much more likely to have a serious accident if you drink or take drugs and drive. If you are drinking or taking drugs, don't drive. Do not ride with a driver who has been drinking or taking drugs. Choose a designated driver or call a taxi.

IGNITION SWITCH

Key Ignition Switch

⚠ WARNING

To reduce the risk of SERIOUS INJURY or DEATH, take the following precautions:

- **NEVER allow children or any person who is unfamiliar with the vehicle to touch the ignition switch or related parts. Unexpected and sudden vehicle movement can occur.**
- **NEVER reach through the steering wheel for the ignition switch, or any other control, while the vehicle is in motion. The presence of your hand or arm in this area may cause a loss of vehicle control resulting in an accident.**

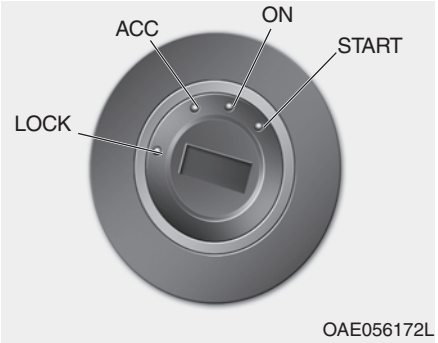

Whenever the front door is opened, the ignition switch will illuminate, provided the ignition switch is not in the ON position. The light will go off immediately when the ignition switch is turned on or go off after about 30 seconds when the door is closed. (if equipped)

⚠ WARNING

NEVER turn the ignition switch to the LOCK or ACC position while the vehicle is in motion except in an emergency. This will result in the engine turning off and loss of power assist for the steering and brake systems. This may lead to loss of directional control and braking function, which could cause an accident.

Before leaving the driver's seat, always make sure the shift lever is in P (Park, for automatic transmission/dual clutch transmission vehicle) position, apply the parking brake, and turn ignition switch to the LOCK position.

Unexpected vehicle movement may occur if these precautions are not followed.

Key ignition switch positions

Switch Position	Action	Notice
LOCK	To turn the ignition switch to the LOCK position, put the key in at the ACC position and turn the key towards the LOCK position. The ignition key can be removed in the LOCK position. (The shift lever must be in the P (Park) position for automatic transmission/dual clutch transmission vehicles)	
ACC	Electrical accessories are usable. The steering wheel unlocks.	
ON	This is the normal key position when the engine has started. All features and accessories are usable. The warning lights can be checked when you turn the ignition switch from ACC to ON.	Do not leave the ignition switch in the ON position when the engine is not running in order to prevent the battery from discharging.
START	To start the engine, turn the ignition switch to the START position. The switch returns to the ON position when you let go of the key.	The engine will crank until you release the key.

Starting the engine

⚠ WARNING

Always wear appropriate shoes when operating your vehicle.

Unsuitable shoes, such as high heels, ski boots, sandals, flip-flops, etc., may interfere with your ability to use the brake and accelerator pedals.

Vehicle with automatic transmission/ dual clutch transmission:

1. Make sure the parking brake is applied.
2. Make sure the shift lever is in P (Park).
3. Depress the brake pedal.
4. Turn the ignition switch to the START position. Hold the key (maximum of 10 seconds) until the engine starts and release it.

i Information

- **It is best to maintain a moderate engine speed until the vehicle engine comes up to normal operating temperature. Avoid harsh or abrupt acceleration or deceleration while the engine is still cold.**
- **Whether the engine is cold or warm, always start the vehicle with your foot on the brake pedal. Do not depress the accelerator while starting the vehicle. Do not rev the engine while warming it up.**

NOTICE

To prevent damage to the vehicle:

- **Do not hold the ignition key in the START position for more than 10 seconds. Wait 5 to 10 seconds before trying again.**
- **Do not push or tow your vehicle to start the engine.**

Engine Start/Stop Button

OOS057001

Whenever the front door is opened, the Engine Start/Stop button will illuminate and will go off 30 seconds after the door is closed.

⚠ WARNING

To reduce risk of serious injury or death, NEVER allow children or any person who is unfamiliar with the vehicle to touch the Engine Start/Stop button or related parts. Unexpected and sudden vehicle movement can occur.

⚠ WARNING

To turn the engine off in an emergency:

Press and hold the Engine Start/Stop button for more than two seconds OR rapidly press and release the Engine Start/Stop button three times (within three seconds).

If the vehicle is still moving, you can restart the engine without depressing the brake pedal by pressing the Engine Start/Stop button with the shift lever in the N (Neutral) position.

⚠ WARNING

- **NEVER press the Engine Start/Stop button while the vehicle is in motion except in an emergency. This will result in the engine turning off and loss of power assist for the steering and brake systems.**

  This may lead to loss of directional control and braking function, which could cause an accident.
- **Before leaving the driver's seat, always make sure the shift lever is in the P (Park) position, set the parking brake, press the Engine Start/Stop button to the OFF position, and take the Smart Key with you. Unexpected vehicle movement may occur if these precautions are not followed.**
- **NEVER reach through the steering wheel for the Engine Start/Stop button or any other control while the vehicle is in motion. The presence of your hand or arm in this area may cause a loss of vehicle control resulting in an accident.**

Engine Start/Stop button positions

- Vehicle with automatic transmission/dual clutch transmission

Button Position	Action	Notice
OFF	To turn off the engine, press the Engine Start/Stop button with shift lever in P (Park). When you press the Engine Start/Stop button without the shift lever in P (Park), the Engine Start/Stop button does not turn to the OFF position, but turns to the ACC position.	
ACC	Press the Engine Start/Stop button when the button is in the OFF position without depressing the brake pedal. Electrical accessories are usable.	If you leave the Engine Start/Stop button in the ACC position for more than one hour, the battery power will turn off automatically to prevent the battery from discharging.

- Vehicle with automatic transmission/dual clutch transmission

Button Position	Action	Notice
ON	Press the Engine Start/Stop button while it is in the ACC position without depressing the brake pedal. The warning lights can be checked before the engine is started.	Do not leave the Engine Start/Stop button in the ON position when the engine is not running to prevent the battery from discharging.
START	To start the engine, depress the brake pedal and press the Engine Start/Stop button with the shift lever in the P (Park) or in the N (Neutral) position. For your safety, start the engine with the shift lever in the P (Park) position.	If you press the Engine Start/Stop button without depressing the brake pedal, the engine does not start and the Engine Start/Stop button changes as follows: **OFF → ACC → ON → OFF** However, the engine may start if you depress the brake pedal within 0.5 second after pressing the Engine Start/Stop button from the OFF position.

Starting the engine

⚠ WARNING

- **Always wear appropriate shoes when operating your vehicle.**

  Unsuitable shoes, such as high heels, ski boots, sandals, flip-flops, etc., may interfere with your ability to use the brake and accelerator pedals.
- **Do not start the vehicle with the accelerator pedal depressed. The vehicle can move and lead to an accident.**
- **Wait until the engine rpm is normal. The vehicle may suddenly move if the brake pedal is released when the rpm is high.**

Information

- **The engine will start by pressing the Engine Start/Stop button, only when the smart key is in the vehicle.**
- **Even if the smart key is in the vehicle, if it is far away from the driver, the engine may not start.**
- **When the Engine Start/Stop button is in the ACC or ON position, if any door is open, the system checks for the smart key. If the smart key is not in the vehicle, the "🚗" indicator will blink and the warning "Key not in vehicle" will come on and if all doors are closed, the chime will also sound for about 5 seconds. Keep the smart key in the vehicle when using the ACC position or if the vehicle engine is ON.**

Vehicle with automatic transmission/ dual clutch transmission:

1. Always carry the smart key with you.
2. Make sure the parking brake is applied.
3. Make sure the shift lever is in P (Park).
4. Depress the brake pedal.
5. Press the Engine Start/Stop button.

Information

- **Do not wait for the engine to warm up while the vehicle remains stationary. Start driving at moderate engine speeds. (Aggressive accelerating and decelerating should be avoided.)**
- **Always start the vehicle with your foot on the brake pedal. Do not depress the accelerator while starting the vehicle. Do not rev the engine while warming it up.**

NOTICE

To prevent damage to the vehicle:

- **If the engine stalls while you are in motion, do not attempt to move the shift lever to the P (Park) position.**

  If traffic and road conditions permit, you may put the shift lever in the N (Neutral) position while the vehicle is still moving and press the Engine Start/Stop button in an attempt to restart the engine.
- **Do not push or tow your vehicle to start the engine.**

NOTICE

To prevent damage to the vehicle:

When the stop lamp switch fuse is blown, you can't start the engine normally. Replace the fuse with a new one. If you are not able to replace the fuse, you can start the engine by pressing and holding the Engine Start/Stop button for 10 seconds with the Engine Start/Stop button in the ACC position.

Do not press the Engine Start/Stop button for more than 10 seconds except when the stop lamp switch fuse is blown.

For your safety always depress the brake pedal before starting the engine.

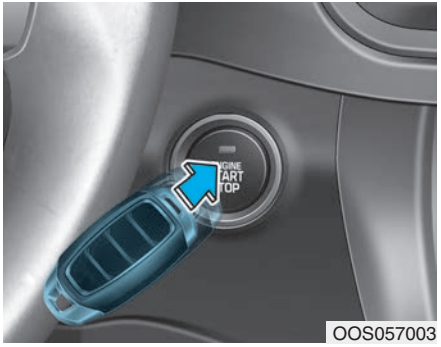

Information

If the smart key battery is weak or the smart key does not work correctly, you can start the engine by pressing the Engine Start/Stop button with the smart key in the direction of the picture above.

AUTOMATIC TRANSMISSION

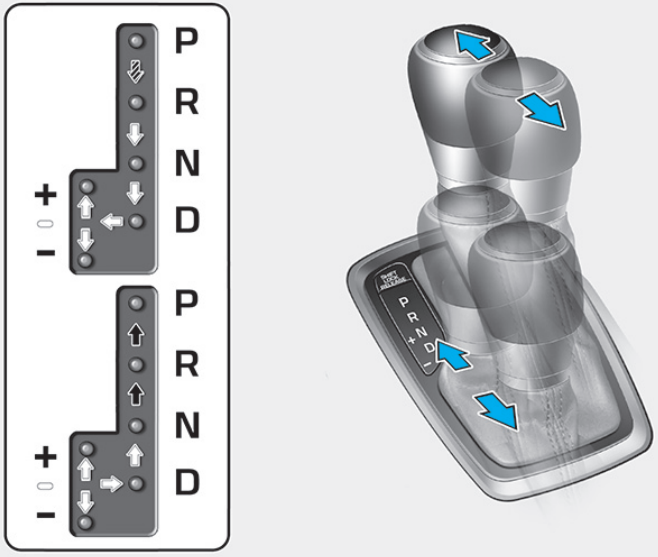

Press the shift button, then move shift lever.

Depress the brake pedal, press ths shift button, and then move shift lever.

Move shift lever.

OOS057004

Automatic Transmission Operation

The automatic transmission has six forward speeds and one reverse speed. The individual speeds are selected automatically in the D (Drive) position.

⚠ WARNING

To reduce the risk of serious injury or death:

- **ALWAYS check the surrounding areas near your vehicle for people, especially children, before shifting a vehicle into D (Drive) or R (Reverse).**
- **Before leaving the driver's seat, always make sure the shift lever is in the P (Park) position, then set the parking brake, and place the ignition switch in the LOCK/OFF position. Unexpected and sudden vehicle movement can occur if these precautions are not followed.**
- **When using Manual Shift Mode, use caution when shifting from a higher gear to a lower gear on slippery roads. This could cause the tires to slip and may result in an accident.**

Transmission ranges

The indicator in the instrument cluster displays the shift lever position when the ignition switch is in the ON position.

P (Park)

Always come to a complete stop before shifting into P (Park).

To shift from P (Park), you must depress firmly on the brake pedal and make sure your foot is off the accelerator pedal.

If you have done all of the above and still cannot shift the lever out of P (Park), see "Shift-Lock Release" in this section.

The shift lever must be in P (Park) before turning the engine off.

⚠ WARNING

- **Shifting into P (Park) while the vehicle is in motion may cause you to lose control of the vehicle.**
- **After the vehicle has stopped, always make sure the shift lever is in P (Park), apply the parking brake, and turn the engine off.**
- **When parking on an incline, place the shift lever in P (Park) and apply the parking brake to prevent the vehicle from rolling downhill.**

R (Reverse)

Use this position to drive the vehicle backward.

NOTICE

Always come to a complete stop before shifting into or out of R (Reverse); you may damage the transmission if you shift into R (Reverse) while the vehicle is in motion.

N (Neutral)

The wheels and transmission are not engaged.

Use N (Neutral) if you need to restart a stalled engine.

Shift into P (Park) if you need to leave your vehicle for any reason.

Always depress the brake pedal when you are shifting from N (Neutral) to another gear.

⚠ WARNING

Do not shift into gear unless your foot is firmly on the brake pedal. Shifting into gear when the engine is running at high speed can cause the vehicle to move very rapidly. You could lose control of the vehicle and hit people or objects.

D (Drive)

This is the normal driving position. The transmission will automatically shift through a six-gear sequence, providing the best fuel economy and power.

For extra power when passing another vehicle or driving uphill depress the accelerator pedal further until you feel the transmission downshift to a lower gear.

The DRIVE MODE switch, located on the shift lever console, allows the driver to switch from COMFORT mode to SPORT mode.

For more information, refer to "Drive Mode Integrated Control System" later in this chapter.

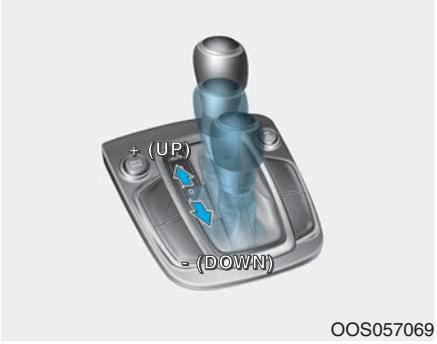

Manual shift mode

Whether the vehicle is stationary or in motion, manual shift mode is selected by pushing the shift lever from the D (Drive) position into the manual gate. To return to D (Drive) range operation, push the shift lever back into the main gate.

In Manual Shift mode, moving the shift lever backwards and forwards will allow you to select the desired range of gears for the current driving conditions.

+ (Up) : Push the lever forward once to shift up one gear.

- (Down) : Pull the lever backwards once to shift down one gear.

i Information

- **Only the six forward gears can be selected in Manual Shift mode. To reverse or park the vehicle, move the shift lever to the R (Reverse) or P (Park) position as required.**
- **Downshifts are made automatically when the vehicle slows down. When the vehicle stops, 1st gear is automatically selected.**
- **When the engine rpm approaches the red zone the transmission will upshift automatically.**

- **If the driver presses the lever to + (Up) or - (Down) position, the transmission may not make the requested gear change if the next gear is outside of the allowable engine rpm range. The driver must execute upshifts in accordance with road conditions, taking care to keep the engine rpms below the red zone.**
- **When accelerating from a stop on a slippery road, push the shift lever forward into the + (Up) position. This allows the transmission to shift into the 2nd gear which is better for smooth driving on a slippery road. Push the shift lever to the - (Down) side to shift back to the 1st gear.**
- **When driving in Manual Shift Mode, slow down before shifting to a lower gear. Otherwise, the lower gear may not be engaged if the engine rpms are outside of the allowable range.**

Shift-lock system

For your safety, the automatic transmission has a shift-lock system which prevents shifting the transmission from P (Park) into R (Reverse) unless the brake pedal is depressed.

To shift the transmission from P (Park) into R (Reverse):

1. Depress and hold the brake pedal.
2. Start the engine or place the ignition switch in the ON position.
3. Move the shift lever.

Shift-lock release

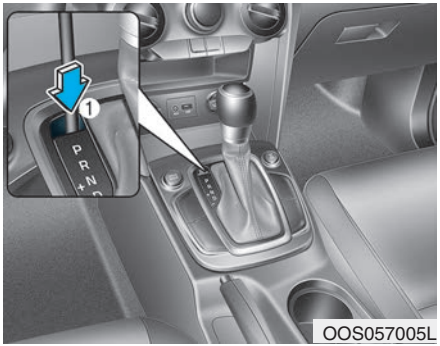

OOS057005L

If the shift lever cannot be moved from the P (Park) position into R (Reverse) position with the brake pedal depressed, continue depressing the brake, and then do the following:

1. Place the ignition switch in the LOCK/OFF position.
2. Apply the parking brake.
3. Carefully remove the cap (1) covering the shift-lock release access hole.
4. Insert a tool (e.g. flathead screwdriver) into the access hole and press down on the tool.

5. Move the shift lever.
6. Remove the tool from the shift-lock override access hole then install the cap.

If you need to use the shift-lock release, have your vehicle inspected by an authorized HYUNDAI dealer as soon as possible.

Parking

Always come to a complete stop and continue to depress the brake pedal. Move the shift lever into the P (Park) position, apply the parking brake, and place the ignition switch in the LOCK/OFF position. Take the Key with you when exiting the vehicle.

⚠ WARNING

- **When you stay in the vehicle with the engine running, be careful not to depress the accelerator pedal for a long period of time. The engine or exhaust system may overheat and start a fire.**
- **The exhaust gas and the exhaust system are very hot. Keep away from the exhaust system components.**
- **Do not stop or park over flammable materials, such as dry grass, paper or leaves. They may ignite and cause a fire.**

Good Driving Practices

- Never move the shift lever from P (Park) or N (Neutral) to any other position with the accelerator pedal depressed.
- Never move the shift lever into P (Park) when the vehicle is in motion.

  Be sure the vehicle is completely stopped before you attempt to shift into R (Reverse) or D (Drive).
- Do not move the shift lever to N (Neutral) when driving. If the shift lever is moved to N (Neutral) while driving the vehicle loses the ability to provide engine braking. Doing so may increase the risk of an accident.

  Also, moving the shift lever back to D (Drive) while the vehicle is moving may severely damage the transmission.
- Do not drive with your foot resting on the brake pedal. Even light, but consistent pedal pressure can result in the brakes overheating, brake wear and possibly even brake failure.

- Depressing both accelerator and brake pedals at the same time can trigger logic for engine power reduction to assure vehicle deceleration. Vehicle acceleration will resume after the brake pedal is released.
- Always apply the parking brake when leaving the vehicle. Do not depend on placing the transmission in P (Park) to keep the vehicle from moving.
- Exercise extreme caution when driving on a slippery surface. Be especially careful when braking, accelerating or shifting gears. On a slippery surface, an abrupt change in vehicle speed can cause the drive wheels to lose traction and may cause loss of vehicle control resulting in an accident.
- Optimum vehicle performance and economy is obtained by smoothly depressing and releasing the accelerator.

⚠ WARNING

To reduce the risk of SERIOUS INJURY or DEATH:

- **ALWAYS wear your seatbelt. In a collision, an unbelted occupant is significantly more likely to be seriously injured or killed than a properly belted occupant.**
- **Avoid high speeds when cornering or turning.**
- **Do not make quick steering wheel movements, such as sharp lane changes or fast, sharp turns.**
- **The risk of rollover is greatly increased if you lose control of your vehicle at highway speeds.**
- **Loss of control often occurs if two or more wheels drop off the roadway and the driver over steers to reenter the roadway.**
- **In the event your vehicle leaves the roadway, do not steer sharply. Instead, slow down before pulling back into the travel lanes.**
- **HYUNDAI recommends you follow all posted speed limits.**

DUAL CLUTCH TRANSMISSION (IF EQUIPPED)

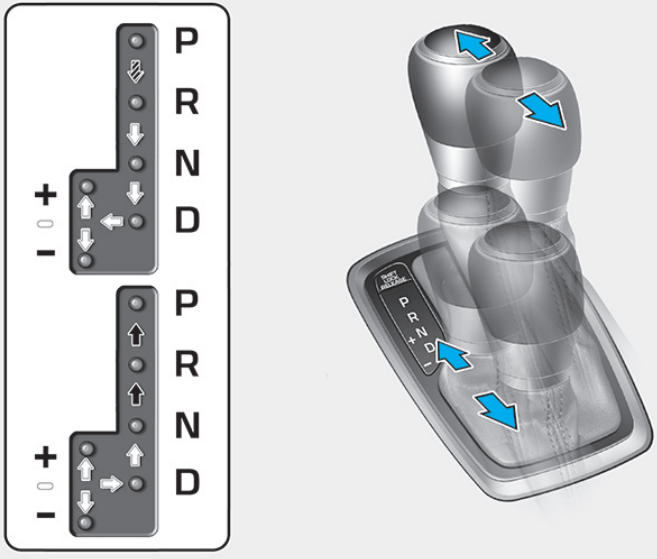

Press the shift button, then move shift lever.

Depress the brake pedal, press the shift button, and then move shift lever.

Move shift lever.

OOS057004

Dual Clutch Transmission Operation

The dual clutch transmission has seven forward speeds and one reverse speed.

The individual speeds are selected automatically when the shift lever is in the D (Drive) position.

- The dual clutch transmission can be thought of as an automatically shifting manual transmission. It gives the driving feel of a manual transmission, yet provides the ease of a fully automatic transmission.
- When D (Drive) is selected, the transmission will automatically shift through the gears similar to a conventional automatic transmission. Unlike a traditional automatic transmission, the gear shifting can sometimes be felt and heard as the actuators engage the clutches and the gears are selected.

- The dual clutch transmission incorporates a dry-type dual clutch mechanism, which allows for better acceleration performance and increased fuel efficiency while driving. But it differs from a conventional automatic transmission because it does not incorporate a torque converter. Instead, the transition from one gear to the next is managed by clutch slip, especially at lower speeds. As a result, shifts are sometimes more noticeable, and a light vibration can be felt as the transmission shaft speed is matched with the engine shaft speed. This is a normal condition of the dual clutch transmission.
- The dry-type clutch transfers torque more directly and provides a direct-drive feeling which may feel different from a conventional automatic transmission. This may be more noticeable when launching the vehicle from a stop or when traveling at low, stop-and-go vehicle speeds.
- When rapidly accelerating from a lower vehicle speed, the engine rpm may increase dramatically as a result of clutch slip as the dual clutch transmission selects the correct gear. This is a normal condition.
- When accelerating from a stop on an incline, press the accelerator smoothly and gradually to avoid any shudder feeling or jerkiness.
- When traveling at a lower vehicle speed, if you release the accelerator pedal quickly, you may feel engine braking before the transmission changes gears. This engine braking feeling is similar to operating a manual transmission at low speed.
- When driving downhill, you may wish to move the gear shift lever to Manual Shift mode and downshift to a lower gear in order to control your speed without using the brake pedal excessively.
- When you turn the engine on and off, you may hear clicking sounds as the system goes through a self-test. This is a normal sound for the dual clutch transmission.
- During the first 1000 miles, you may feel that the vehicle may not be smooth when accelerating at low speed. During this break-in period, the shift quality and performance of your new vehicle is continuously optimized.

⚠ WARNING

To reduce the risk of serious injury or death:

- **ALWAYS check the surrounding areas near your vehicle for people, especially children, before shifting a vehicle into D (Drive) or R (Reverse).**
- **Before leaving the driver's seat, always make sure the shift lever is in the P (Park) position, then set the parking brake, and place the ignition switch in the LOCK/OFF position. Unexpected and sudden vehicle movement can occur if these precautions are not followed.**

- **Do not use aggressive engine braking (shifting from a higher gear to a lower gear) on slippery roads. This could cause the tires to slip and may result in an accident.**

NOTICE

- **Always come to a complete stop before shifting into D (Drive) or R (Reverse).**
- **Do not put the shift lever in N (Neutral) while driving.**

⚠ WARNING

Due to transmission failure, you may not continue to drive and the position indicator (D, P) on the instrument cluster will bilnk.

Contact an authorized HYUNDAI dealer and have the system checked.

DCT warning messages

Steep grade

This warning message is displayed when vehicle is driven slowly on a grade and the vehicle detects that the brake pedal is not applied.

Driving up hills or on steep grades:

- To hold the vehicle on an incline use the foot brake or the parking brake.
- When in stop-and-go traffic on an incline, allow a gap to form ahead of you before moving the vehicle forward. Then hold the vehicle on the incline with the foot brake.
- If the vehicle is held or creeping forward on an incline by applying the accelerator pedal, the clutch and transmission may overheat which can result in damage. At this time, a warning message will appear on the LCD display.
- If the LCD display warning is active, the foot brake must be applied.
- Ignoring the warnings can lead to damage to the transmission.

OTLE055022

Transmission high temperature

- Under certain conditions, such as repeated stop-and-go launches on steep grades, sudden take off or acceleration, or other harsh driving conditions, the transmission clutch temperatures will increase excessively.
- When the clutch temperatures are too high, the "Transmission temp. is high! Stop safely" warning message will appear on the LCD display, a chime will sound, and the transmission shifting may not be smooth.
- If this occurs, pull over to a safe location, stop the vehicle with the engine running, apply the brakes and shift the vehicle to P (Park) with engine on, and allow the transmission to cool.
- If you ignore this warning, the driving condition may become worse. You may experience abrupt shifts, frequent shifts, or jerkiness.
- When the message "Trans cooled. Resume driving" appears you can continue to drive your vehicle.
- When possible, drive the vehicle smoothly.

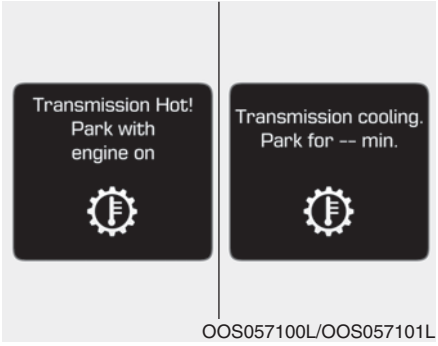

OOS057100L/OOS057101L

Transmission overheated

- If the vehicle continues to be driven and the clutch temperatures reach the maximum temperature limit, the "Transmission Hot! Park with engine on" warning will be displayed. When this occurs the clutch is disabled until the clutch cools to normal temperatures.
- The warning will display a time to wait for the transmission to cool.
- If this occurs, pull over to a safe location, stop the vehicle with the engine running, apply the brakes and shift the vehicle to P (Park) with engine on for a certain time, and allow the transmission to cool.

- When the message "Trans cooled. Resume driving" appears you can continue to drive your vehicle.
- When possible, drive the vehicle smoothly.

If any of the warning messages in the LCD display continue to blink, for your safety, contact an authorized HYUNDAI dealer and have the system checked.

Transmission ranges

The indicator in the instrument cluster displays the shift lever position when the ignition switch is in the ON position

P (Park)

Always come to a complete stop before shifting into P (Park).

To shift from P (Park), you must depress firmly on the brake pedal and make sure your foot is off the accelerator pedal.

If you have done all of the above and still cannot shift the lever out of P (Park), see "Shift-Lock Release" in this chapter.

The shift lever must be in P (Park) before turning the engine off.

⚠ WARNING

- **Shifting into P (Park) while the vehicle is in motion may cause you to lose control of the vehicle.**
- **After the vehicle has stopped, always make sure the shift lever is in P (Park), apply the parking brake, and turn the engine off.**
- **When parking on an incline, place the shift lever in P (Park) and apply the parking brake to prevent the vehicle from rolling downhill.**
- **For safety, always engage the parking brake with the shift lever in the P (Park) position except for the case of emergency parking.**

R (Reverse)

Use this position to drive the vehicle backward.

NOTICE

Always come to a complete stop before shifting into or out of R (Reverse); you may damage the transmission if you shift into R (Reverse) while the vehicle is in motion.

N (Neutral)

The wheels and transmission are not engaged.

Use N (Neutral) if you need to restart a stalled engine, or if it is necessary to stop with the engine ON.

Shift into P (Park) if you need to leave your vehicle for any reason.

Always depress the brake pedal when you are shifting from N (Neutral) to another gear.

⚠ WARNING

Do not shift into gear unless your foot is firmly on the brake pedal. Shifting into gear when the engine is running at high speed can cause the vehicle to move very rapidly. You could lose control of the vehicle and hit people or objects.

D (Drive)

This is the normal driving position. The transmission will automatically shift through a seven-gear sequence, providing the best fuel economy and power.

For extra power when passing another vehicle or driving uphill depress the accelerator pedal further until you feel the transmission downshift to a lower gear.

The DRIVE MODE switch, located on the shift lever console, allows the driver to switch from COMFORT mode to SPORT mode.

For more information, refer to "Drive Mode Integrated Control System" later in this chapter.

OOS057069

Manual shift mode

Whether the vehicle is stationary or in motion, manual shift mode is selected by pushing the shift lever from the D (Drive) position into the manual gate. To return to D (Drive) range operation, push the shift lever back into the main gate.

In Manual Shift mode, moving the shift lever backwards and forwards will allow you to select the desired range of gears for the current driving conditions.

+ (Up) : Push the lever forward once to shift up one gear.

- (Down) : Pull the lever backwards once to shift down one gear.

Information

- **Only the seven forward gears can be selected in Manual Shift Mode. To reverse or park the vehicle, move the shift lever to the R (Reverse) or P (Park) position as required.**
- **Downshifts are made automatically when the vehicle slows down. When the vehicle stops, 1st gear is automatically selected.**
- **When the engine rpm approaches the red zone the transmission will upshift automatically.**
- **If the driver presses the lever to + (Up) or - (Down) position, the transmission may not make the requested gear change if the next gear is outside of the allowable engine rpm range. The driver must execute upshifts in accordance with road conditions, taking care to keep the engine rpms below the red zone.**

Shift-lock system

For your safety, the dual clutch transmission has a shift-lock system which prevents shifting the transmission from P (Park) into R (Reverse) unless the brake pedal is depressed.

To shift the transmission from P (Park) into R (Reverse):

1. Depress and hold the brake pedal.
2. Start the engine or place the ignition switch in the ON position.
3. Move the shift lever.

Shift-lock release

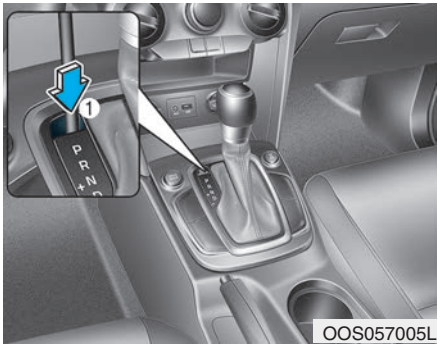

If the shift lever cannot be moved from the P (Park) position into R (Reverse) position with the brake pedal depressed, continue depressing the brake, and then do the following:

1. Place the ignition switch in the LOCK/OFF position.
2. Apply the parking brake.
3. Carefully remove the cap (1) covering the shift-lock release access hole.
4. Insert a tool (e.g. flathead screwdriver) into the access hole and press down on the tool.

5. Move the shift lever.
6. Remove the tool from the shift-lock override access hole then install the cap.

If you need to use the shift-lock release, have your vehicle inspected by an authorized HYUNDAI dealer immediately.

Parking

Always come to a complete stop and continue to depress the brake pedal. Move the shift lever into the P (Park) position, apply the parking brake, and place the ignition switch in the LOCK/OFF position. Take the key with you when exiting the vehicle.

Moving up a steep grade from a standing start

To move up a steep grade from a standing start, depress the brake pedal, shift the shift lever to D (Drive). Depress the accelerator pedal gradually while releasing the brake pedal.

⚠ WARNING

When you stay in the vehicle with the engine running, be careful not to depress the accelerator pedal for a long period of time. The engine or exhaust system may overheat and start a fire.

The exhaust gas and the exhaust system are very hot. Keep away from the exhaust system components.

Do not stop or park over flammable materials, such as dry grass, paper or leaves. They may ignite and cause a fire.

Good Driving Practices

- Never move the shift lever from P (Park) or N (Neutral) to any other position with the accelerator pedal depressed.
- Never move the shift lever into P (Park) when the vehicle is in motion.

  Be sure the vehicle is completely stopped before you attempt to shift into R (Reverse) or D (Drive).
- Do not move the shift lever to N (Neutral) when driving. Doing so may result in an accident because of a loss of engine braking and the transmission could be damaged.
- Do not drive with your foot resting on the brake pedal. Even light, but consistent pedal pressure can result in the brakes overheating, brake wear and possibly even brake failure.
- Depressing both accelerator and brake pedals at the same time can trigger logic for engine power reduction to assure vehicle deceleration. Vehicle acceleration will resume after the brake pedal is released.

- When driving in Manual Shift mode, slow down before shifting to a lower gear. Otherwise, the lower gear may not be engaged if the engine rpms are outside of the allowable range.
- Always apply the parking brake when leaving the vehicle. Do not depend on placing the transmission in P (Park) to keep the vehicle from moving.
- Exercise extreme caution when driving on a slippery surface. Be especially careful when braking, accelerating or shifting gears. On a slippery surface, an abrupt change in vehicle speed can cause the drive wheels to lose traction and may cause loss of vehicle control resulting in an accident.
- Optimum vehicle performance and economy is obtained by smoothly depressing and releasing the accelerator.

⚠ WARNING

To reduce the risk of SERIOUS INJURY or DEATH:

- **ALWAYS wear your seatbelt. In a collision, an unbelted occupant is significantly more likely to be seriously injured or killed than a properly belted occupant.**
- **Avoid high speeds when cornering or turning.**
- **Do not make quick steering wheel movements, such as sharp lane changes or fast, sharp turns.**
- **The risk of rollover is greatly increased if you lose control of your vehicle at highway speeds.**
- **Loss of control often occurs if two or more wheels drop off the roadway and the driver over steers to reenter the roadway.**
- **In the event your vehicle leaves the roadway, do not steer sharply. Instead, slow down before pulling back into the travel lanes.**
- **HYUNDAI recommends you follow all posted speed limits.**

BRAKING SYSTEM

Power Brakes

Your vehicle has power-assisted brakes that adjust automatically through normal usage.

If the engine is not running or is turned off while driving, the power assist for the brakes will not work. You can still stop your vehicle by applying greater force to the brake pedal than typical. The stopping distance, however, will be longer than with power brakes.

When the engine is not running, the reserve brake power is partially depleted each time the brake pedal is applied. Do not pump the brake pedal when the power assist has been interrupted.

Pump the brake pedal only when necessary to maintain steering control on slippery surfaces.

⚠ WARNING

Take the following precautions:

- **Do not drive with your foot resting on the brake pedal. This will create abnormal high brake temperatures, excessive brake lining and pad wear, and increased stopping distances.**
- **When descending down a long or steep hill, move the gear shift lever to Manual Shift Mode and manually downshift to a lower gear in order to control your speed without using the brake pedal excessively. Applying the brakes continuously will cause the brakes to overheat and could result in a temporary loss of braking performance.**
- **Wet brakes may impair the vehicle's ability to safely slow down; the vehicle may also pull to one side when the brakes are applied. Applying the brakes lightly will indicate whether they have been affected in this way. Always test your brakes in this fashion after driving through deep water. To dry the brakes, lightly tap the brake pedal to heat up the brakes while maintaining a safe forward speed until brake performance returns to normal. Avoid driving at high speeds until the brakes function correctly.**

Disc Brakes Wear Indicator

When your brake pads are worn and new pads are required, you will hear a high pitched warning sound from your front or rear brakes. You may hear this sound come and go or it may occur whenever you depress the brake pedal.

Note that some driving conditions or climates may cause a brake squeal when you first apply (or lightly apply) the brakes. This is normal and does not indicate a problem with your brakes.

NOTICE

To avoid costly brake repairs, do not continue to drive with worn brake pads.

Information

Always replace brake pads as complete front or rear axle sets.

Parking Brake

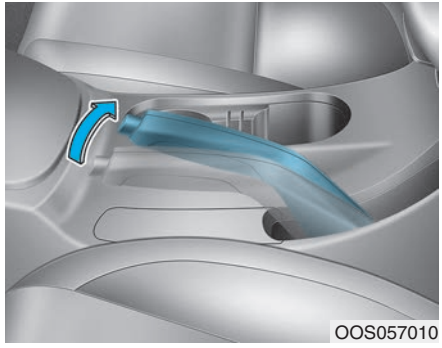

Always set the parking brake before leaving the vehicle. To apply the parking brake:

Firmly depress the brake pedal.

Pull up the parking brake lever as far as possible.

WARNING

To reduce the risk of SERIOUS INJURY or DEATH, do not operate the parking brake while the vehicle is moving except in an emergency situation. It could damage the brake system and lead to an accident.

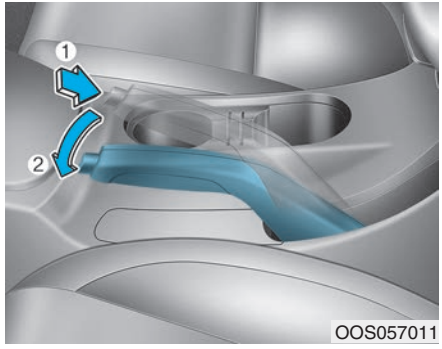

To release:

Firmly depress the brake pedal.

While pressing the release button (1), slightly pull up on the parking brake lever then lower the parking brake lever (2).

If the parking brake does not release or does not release all the way, have your vehicle checked by an authorized HYUNDAI dealer.

⚠ WARNING

- **Whenever leaving the vehicle or parking, always come to a complete stop and continue to depress the brake pedal. Move the shift lever into P (Park) position, then apply the parking brake, and place the ignition switch in the LOCK/OFF position.**

  Vehicles with the parking brake not fully engaged are at risk for moving inadvertently and causing injury to yourself or others.
- **When parking on an incline, block the wheels to prevent the vehicle from rolling down.**
- **NEVER allow anyone who is unfamiliar with the vehicle to touch the parking brake. If the parking brake is released unintentionally, serious injury may occur.**
- **Only release the parking brake when you are seated inside the vehicle with your foot firmly on the brake pedal.**

NOTICE

- **Do not apply the accelerator pedal while the parking brake is engaged. If you depress the accelerator pedal with the parking brake engaged, warning will sound. Damage to the parking brake may occur.**
- **Driving with the parking brake on can overheat the braking system and cause premature wear or damage to brake parts. Make sure the parking brake is released and the Brake Warning Light is off before driving.**

Check the Parking Brake Warning Light by placing the ignition switch to the ON position (do not start the engine).

This light will be illuminated when the parking brake is applied with the ignition switch in the START or ON position.

Before driving, be sure the parking brake is released and the Brake Warning Light is OFF.

If the Parking Brake Warning Light remains on after the parking brake is released while engine is running, there may be a malfunction in the brake system. Immediate attention is necessary.

If at all possible, cease driving the vehicle immediately. If that is not possible, use extreme caution while operating the vehicle and only continue to drive the vehicle until you can reach a safe location.

Anti-lock Brake System (ABS)

⚠ WARNING

An Anti-Lock Braking System (ABS) or an Electronic Stability Control (ESC) system will not prevent accidents due to improper or dangerous driving maneuvers. Even though vehicle control is improved during emergency braking, always maintain a safe distance between you and objects ahead of you. Vehicle speeds should always be reduced during extreme road conditions. The braking distance for cars equipped with ABS or ESC may be longer than for those without these systems in the following road conditions.

Drive your vehicle at reduced speeds during the following conditions:

- **Rough, gravel or snow-covered roads.**
- **On roads where the road surface is pitted or has different surface height.**
- **Tire chains are installed on your vehicle.**

The safety features of an ABS or ESC equipped vehicle should not be tested by high speed driving or cornering. This could endanger the safety of yourself or others.

ABS is an electronic braking system that helps prevent a braking skid. ABS allows the driver to steer and brake at the same time.

Using ABS

To obtain the maximum benefit from your ABS in an emergency situation, do not attempt to modulate your brake pressure and do not try to pump your brakes. Depress your brake pedal as hard as possible.

When you apply your brakes under conditions which may lock the wheels, you may hear sounds from the brakes, or feel a corresponding sensation in the brake pedal. This is normal and it means your ABS is active.

ABS does not reduce the time or distance it takes to stop the vehicle.

Always maintain a safe distance from the vehicle in front of you.

ABS will not prevent a skid that results from sudden changes in direction, such as trying to take a corner too fast or making a sudden lane change. Always drive at a safe speed for the road and weather conditions.

ABS cannot prevent a loss of stability. Always steer moderately when braking hard. Severe or sharp steering wheel movement can still cause your vehicle to veer into oncoming traffic or off the road.

On loose or uneven road surfaces, operation of the anti-lock brake system may result in a longer stopping distance than for vehicles equipped with a conventional brake system.

The ABS warning light ((ABS)) will stay on for several seconds after the ignition switch is in the ON position. During that time, the ABS will go through self-diagnosis and the light will go off if everything is normal. If the light stays on, you may have a problem with your ABS. Contact an authorized HYUNDAI dealer as soon as possible

⚠ WARNING

If the ABS warning light ((ABS)) is on and stays on, you may have a problem with the ABS. Your power brakes will work normally. To reduce the risk of serious injury or death, contact your HYUNDAI dealer as soon as possible.

⚠ CAUTION

When you drive on a road having poor traction, such as an icy road, and apply your brakes continuously, the ABS will be active continuously and the ABS warning light ((ABS)) may illuminate. Pull your car over to a safe place and turn the engine off.

Restart the engine. If the ABS warning light is off, then your ABS system is normal.

Otherwise, you may have a problem with your ABS system. Contact an authorized HYUNDAI dealer as soon as possible.

i Information

When you jump start your vehicle because of a drained battery, the ABS warning light ((ABS)) may turn on at the same time. This happens because of the low battery voltage. It does not mean your ABS is malfunctioning. Have the battery recharged before driving the vehicle.

Electronic Stability Control (ESC)

OOS058012N

The Electronic Stability Control (ESC) system helps to stabilize the vehicle during cornering maneuvers. ESC checks where you are steering and where the vehicle is actually going. ESC applies braking pressure to any one of the vehicle's brakes and intervenes in the engine management system to assist the driver with keeping the vehicle on the intended path. It is not a substitute for safe driving practices. Always adjust your speed and driving to the road conditions.

⚠ WARNING

Never drive too fast for the road conditions or too quickly when cornering. The ESC system will not prevent accidents.

Excessive speed in turns, abrupt maneuvers, and hydroplaning on wet surfaces can result in severe accidents.

ESC operation

ESC ON condition

When the ignition switch is in the ON position, the ESC and the ESC OFF indicator lights illuminate for approximately three seconds. After both lights go off, the ESC is enabled.

When operating

When the ESC is in operation, the ESC indicator light blinks:

- When you apply your brakes under conditions which may lock the wheels, you may hear sounds from the brakes, or feel a corresponding sensation in the brake pedal. This is normal and it means your ESC is active.
- When the ESC activates, the engine may not respond to the accelerator as it does under routine conditions.
- If the Cruise Control was in use when the ESC activates, the Cruise Control automatically disengages. The Cruise Control can be reengaged when the road conditions allow. See "Cruise Control System" later in this chapter. (if equipped)
- When moving out of the mud or driving on a slippery road, the engine RPM (revolutions per minute) may not increase even if you press the accelerator pedal deeply. This is to maintain the stability and traction of the vehicle and does not indicate a problem.

ESC OFF condition

To cancel ESC operation :

• State 1

Press the ESC OFF button briefly. The ESC OFF indicator light and message "Traction Control disabled" will illuminate. In this state, the traction

control function of ESC (engine management) is disabled, but the brake control function of ESC (braking management) still operates.

• State 2

Press and hold the ESC OFF button continuously for more than 3 seconds. The ESC OFF indicator light and message "Traction and Stability Control disabled" illuminates and a warning chime sounds. In this state, both the traction control function of ESC (engine management) and the brake control function of ESC (braking management) are disabled.

If the ignition switch is placed to the LOCK/OFF position when ESC is off, ESC remains off. Upon restarting the engine, the ESC will automatically turn on again.

Indicator lights

■ ESC indicator light (blinks)

■ ESC OFF indicator light (comes on)

When the ignition switch is placed to the ON position, the ESC indicator light illuminates, then goes off if the ESC system is operating normally.

The ESC indicator light blinks whenever the ESC is operating.

If ESC indicator light stays on, your vehicle may have a malfunction with the ESC system. When this warning light illuminates have your vehicle checked by an authorized HYUNDAI dealer as soon as possible.

The ESC OFF indicator light comes on when the ESC is turned off.

⚠ WARNING

When the ESC is blinking, this indicates the ESC is active:

Drive slowly and NEVER attempt to accelerate. NEVER turn the ESC off while the ESC indicator light is blinking or you may lose control of the vehicle resulting in an accident.

NOTICE

Driving with wheels and tires with different sizes may cause the ESC system to malfunction. Before replacing tires, make sure all four tires and wheels are the same size. Never drive the vehicle with different sized wheels and tires installed.

ESC OFF usage

When Driving

The ESC OFF mode should only be used briefly to help free the vehicle if stuck in snow or mud by temporarily stopping operation of the ESC to maintain wheel torque.

To turn ESC off while driving, press the ESC OFF button while driving on a flat road surface.

NOTICE

To prevent damage to the transmission:

- **Do not allow wheel(s) of one axle to spin excessively while the ESC, ABS, and parking brake warning lights are displayed. The repairs would not be covered by the vehicle warranty. Reduce engine power and do not spin the wheel(s) excessively while these lights are displayed.**
- **When operating the vehicle on a dynamometer, make sure the ESC is turned off (ESC OFF light illuminated).**

Information

Turning the ESC off does not affect ABS or standard brake system operation.

Vehicle Stability Management (VSM)

The Vehicle Stability Management (VSM) is a function of the Electronic Stability Control (ESC) system. It helps ensure the vehicle stays stable when accelerating or braking suddenly on wet, slippery and rough roads where traction over the four tires can suddenly become uneven.

WARNING

Take the following precautions when using the Vehicle Stability Management (VSM):

- **ALWAYS check the speed and the distance to the vehicle ahead. The VSM is not a substitute for safe driving practices.**
- **Never drive too fast for the road conditions. The VSM system will not prevent accidents. Excessive speed in bad weather, slippery and uneven roads can result in severe accidents.**

VSM operation

VSM ON condition

The VSM operates when:

- The Electronic Stability Control (ESC) is on.
- Vehicle speed is approximately above 9 mph (15 km/h) on curve roads.
- Vehicle speed is approximately above 12 mph (20 km/h) when the vehicle is braking on rough roads.

When operating

When you apply your brakes under conditions which may activate the ESC, you may hear sounds from the brakes, or feel a corresponding sensation in the brake pedal. This is normal and it means your VSM is active.

NOTICE

The VSM does not operate when:

- **Driving on a banked road such as gradient or incline.**
- **Driving rearward.**
- **ESC OFF indicator light is on.**
- **EPS (Electric Power Steering) warning light (⊘!) is on or blinks.**

⚠ WARNING

If ESC indicator light ( ) or EPS warning light (⊘!) stays on or blinks, your vehicle may have a malfunction with the VSM system. When the warning light illuminates, have your vehicle checked by an authorized HYUNDAI dealer as soon as possible.

Driving with wheels and tires with different sizes may cause the ESC system to malfunction. Before replacing tires, make sure all four tires and wheels are the same size. Never drive the vehicle with different sized tires and wheels installed.

Hill-Start Assist Control (HAC)

The Hill-Start Assist Control (HAC) helps prevent the vehicle from rolling backwards when starting a vehicle from a stop on a hill. The system operates the brakes automatically for approximately 2 seconds and releases the brake after 2 seconds or when the accelerator pedal is depressed.

⚠ WARNING

Always be ready to depress the accelerator pedal when starting off on a incline. The HAC activates only for approximately 2 seconds.

NOTICE

- **The HAC does not operate when the shift lever is in P (Park) or N (Neutral)**
- **The HAC activates even though the ESC (Electronic Stability Control) is off but does not activate when the ESC has malfunctioned.**

Downhill Brake Control (DBC)

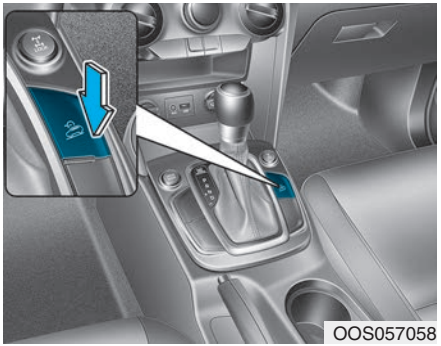
OOS057058

The Downhill Brake Control (DBC) feature assists the driver to descend down a steep hill without having to depress the brake pedal. The system automatically applies the brakes to maintain the vehicle speed below 5 mph (8 km/h) and allows the driver to concentrate on steering the vehicle down hill.

⚠ WARNING

Always turn off the DBC on normal roads. The DBC might activate inadvertently from the standby mode when driving through speed bumps or making sharp curves.

NOTICE

- **The DBC defaults to the OFF position whenever the ignition switch is placed in the ON position.**
- **Noise or vibration may occur from the brakes when the DBC is activated.**
- **The rear stop light comes on when DBC is activated.**

DBC operation

Mode	Indicator light	Description
Standby	illuminated	Press the DBC button when vehicle speed is under 25 mph (40 km/h). The DBC system will turn ON and enter the standby mode. The system does not turn ON if vehicle speed is over 25 mph (40 km/h).
Activated	blinks	In the standby mode, if vehicle speed is under 22 mph (35 km/h) while driving down a steep hill, the DBC will activate automatically.
Temporarily deactivated	illuminated	In the activated mode, the DBC will temporarily deactivate under the following conditions: • The hill is not steep enough. • The brake pedal or accelerator pedal is depressed. If the above conditions are not met, the DBC will automatically activate again.
OFF	not illuminated	The DBC will turn OFF under the following conditions: • The DBC button is pressed again. • Vehicle speed is over 38 mph (60 km/h).

⚠ WARNING

If the DBC red indicator light illuminates, the system may have overheated or have malfunctioned. When the warning light illuminates even though the DBC system has cooled off, have your vehicle checked by an authorized HYUNDAI dealer as soon as possible.

NOTICE

- **The DBC may not deactivate on steep inclines even though the brake or accelerator pedal is depressed.**
- **The DBC does not operate when:**
  - **The shift lever is in P (Park).**
  - **The ESC is activated.**

Good Braking Practices

⚠ WARNING

Whenever leaving the vehicle or parking, always come to a complete stop and continue to depress the brake pedal. Move the shift lever into P (Park) position, then apply the parking brake, and place the ignition switch in the LOCK/OFF position.

Vehicles parked with the parking brake not applied or not fully engaged may roll inadvertently and may cause injury to the driver and others. ALWAYS apply the parking brake before exiting the vehicle.

Wet brakes can be dangerous! The brakes may get wet if the vehicle is driven through standing water or if it is washed. Your vehicle will not stop as quickly if the brakes are wet. Wet brakes may cause the vehicle to pull to one side.

To dry the brakes, apply the brakes lightly until the braking action returns to normal, taking care to keep the vehicle under control at all times. If the braking action does not return to normal, stop as soon as it is safe to do so and call an authorized HYUNDAI dealer for assistance.

DO NOT drive with your foot resting on the brake pedal. Even light, but constant pedal pressure can result in the brakes overheating, brake wear, and possibly even brake failure.

If a tire goes flat while you are driving, apply the brakes gently and keep the vehicle pointed straight ahead while you slow down. When you are moving slowly enough for it to be safe to do so, pull off the road and stop in a safe location.

Keep your foot firmly on the brake pedal when the vehicle is stopped to prevent the vehicle from rolling forward.

ALL WHEEL DRIVE (AWD) (IF EQUIPPED)

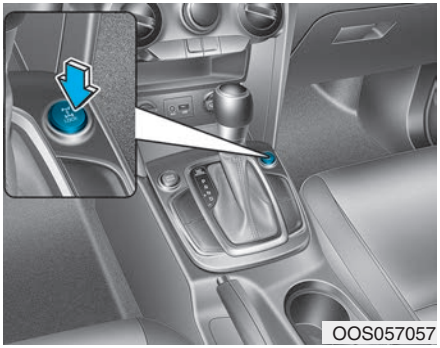

The All Wheel Drive (AWD) system delivers engine torque to both the front and rear wheels for extra traction. AWD is useful when maximum traction is required on slippery, muddy, wet, or snow-covered roads.

Occasional off-road use such as established unpaved roads and trails are OK. It is always important that the driver carefully reduces the speed to a level that does not exceed the safe operating speed for those conditions.

⚠ WARNING

To reduce the risk of SERIOUS INJURY or DEATH:

- **Do not drive in conditions that exceed the vehicles intended design such as challenging off-road conditions.**
- **Avoid high speeds when cornering or turning.**
- **Do not make quick steering wheel movements, such as sharp lane changes or fast, sharp turns.**
- **The risk of a rollover is greatly increased if you lose control of your vehicle at highway speeds.**
- **Loss of control often occurs if two or more wheels drop off the roadway and the driver over steers to reenter the roadway.**
- **In the event your vehicle leaves the roadway, do not steer sharply. Instead, slow down before pulling back into the travel lanes.**

NOTICE

- **Do not drive in water if the level is higher than the bottom of the vehicle.**
- **Check your brake condition once you are out of mud or water. Depress the brake pedal several times as you move slowly until you feel normal braking return.**
- **Shorten your scheduled maintenance interval if you drive in off-road conditions such as sand, mud or water (see "Maintenance Under Severe Usage Conditions" in chapter 7).**
- **Always wash your vehicle thoroughly after off road use, especially the bottom of the vehicle.**
- **Be sure to equip the vehicle with four tires of the same size and type.**
- **Make sure that a full time AWD vehicle is towed by a flat bed tow truck.**

AWD operation

All Wheel Drive (AWD) mode selection

Transfer mode	Selection button	Indicator light	Description
AWD AUTO (AWD LOCK is deactivated)	LOCK	LOCK (not illuminated)	In the AWD AUTO mode, under normal operating conditions, the vehicle operates similar to conventional 2WD vehicles. If the system determines there is a need for four wheel drive, the engine's driving power is distributed to all four wheels automatically. Use this mode when driving on normal roads.
AWD LOCK	LOCK	LOCK (illuminated)	In the AWD LOCK mode, the system is deactivated when vehicle speed is over 20 mph (30 km/h) and the mode is shifted to AWD AUTO mode. If the vehicle speed is reduced back down to 20 mph (30 km/h) the system shifts back into AWD LOCK mode. Use this mode when driving up or down steep inclines, driving off-road, driving on sandy and muddy roads, etc. to maximize traction

⚠ WARNING

If AWD warning light ( ) stays on the instrument cluster, your vehicle may have a malfunction with the AWD system. When the AWD warning light ( ) illuminates have your vehicle checked by an authorized HYUNDAI dealer as soon as possible.

⚠ CAUTION

When driving on normal roads, deactivate the AWD LOCK mode by pushing the AWD LOCK button (AWD LOCK indicator light goes off). Driving on normal roads with the AWD LOCK mode, especially, when cornering may cause mechanical noise or vibration. The noise and vibration will disappear when the AWD LOCK mode is deactivated. Prolong driving with the noise and vibration may damage some parts of the power train.

NOTICE

When the AWD LOCK mode is deactivated, a sensation may be felt as the driving power is delivered entirely to the front wheels.

For safe AWD operation

Before driving

- Make sure all passengers are wearing seat belts.
- Sit upright and closer to the steering wheel than usual. Adjust the steering wheel to a position comfortable for you to drive.

Driving on snow-covered or icy roads

- Start off slowly by applying the accelerator pedal gently.
- Use snow tires or tire chains.
- Keep sufficient distance between your vehicle and the vehicle in front of you.
- Apply engine braking during deceleration by switching the gear shift lever to Manual Shift Mode and manually selecting a lower gear.
- Avoid speeding, rapid acceleration, sudden brake applications, and sharp turns to prevent skids.

Driving in sand or mud

- Maintain slow and constant speed.
- Use tire chains driving in mud if necessary.
- Keep sufficient distance between your vehicle and the vehicle in front of you.
- Reduce vehicle speed and always check the road condition.
- Avoid speeding, rapid acceleration, sudden brake applications, and sharp turns to prevent getting stuck.

⚠ CAUTION

When the vehicle is stuck in snow, sand or mud, place a non-slip material under the drive wheels to provide traction OR Slowly spin the wheels in forward and reverse directions which causes a rocking motion that may free the vehicle. However, avoid running the engine continuously at high rpm, doing so may damage the AWD system.

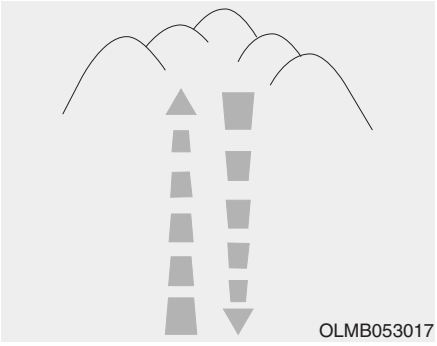

Driving up or down hills

- Driving uphill
  - Before starting off, check if it is possible to drive uphill.
  - Drive as straight as possible.
- Driving downhill
  - Do not change gear while driving downhill. Select gear before driving downhill.
  - Drive slowly using engine braking while driving downhill.
  - Drive straight as possible.

⚠ WARNING

Exercise extreme caution when driving up or down steep hills. The vehicle may flip over depending on the grade, the terrain, and the trail conditions.

⚠ WARNING

Do not drive across the contour of steep hills. A slight change in the wheel angle can destabilize the vehicle, or a stable vehicle may lose stability if the vehicle stops its forward motion. Your vehicle may roll over and lead to a serious injury or death.

Driving through water

- Try to avoid driving in deep standing water. It may stall your engine and clog your exhaust system.
- If you need to drive in water, stop your vehicle, set the vehicle in AWD LOCK mode and drive under 5 mph (8 km/h).
- Do not change gear while driving in water.

⚠ CAUTION

Always drive slowly in water. If you drive too fast, water may get into the engine compartment and wet the ignition system causing your vehicle to suddenly stop.

Additional driving conditions

- Become familiar with the off-road conditions before driving.
- Always pay attention when driving off-road and avoid dangerous areas.
- Drive slowly when driving in heavy wind.
- Reduce vehicle speed when cornering. The center of gravity of AWD vehicles is higher than conventional 2WD vehicles, making them more likely to roll over when you rapidly turn corners.

- Always hold the steering wheel firmly when you are driving off-road.

⚠ WARNING

Do not grab the inside of the steering wheel when you are driving off-road. You may hurt your arm by a sudden steering maneuver or from steering wheel rebound due to an impact with objects on the ground. You could lose control of the steering wheel which may lead to serious injury or death.

Emergency precautions

Tires

Do not use a tire and wheel package with a different size and type from the one originally installed on your vehicle. It can affect the safety and performance of your vehicle, which could lead to steering failure or rollover causing serious injury.

When replacing the tires, be sure to equip all four tires with the tire and wheel of the same size, type, tread, brand and load-carrying capacity. If you equip your vehicle with any tire/wheel combination not recommended by HYUNDAI for off-road driving, you should not use these tires for highway driving.

⚠ WARNING

Never start or run the engine while a full-time AWD vehicle is raised on a jack. The vehicle can slip or roll off of a jack causing serious injury or death to you or those nearby.

Towing

AWD vehicles must be towed with a wheel lift and dollies or flatbed equipment with all the wheels off the ground. For more information, refer to "Towing" in chapter 6.

Dynamometer testing

A full-time AWD vehicle must be tested on a special four wheel chassis dynamometer.

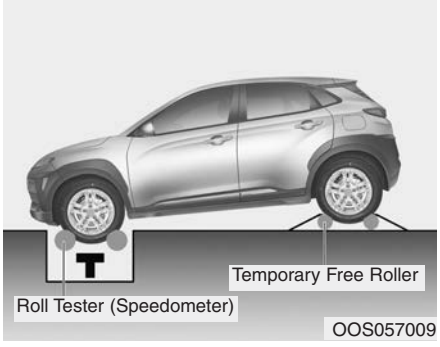

A full-time AWD vehicle should not be tested on a 2WD roll tester. If a 2WD roll tester must be used, perform the following procedure:

1. Check the tire pressures recommended for your vehicle.
2. Place the front wheels on the roll tester for a speedometer test as shown in the illustration.
3. Release the parking brake.
4. Place the rear wheels on the temporary free roller as shown in the illustration.

⚠ CAUTION

- **Never engage the parking brake while performing the test.**
- **When the vehicle is lifted up, do not operate the front and rear wheel separately. All four wheels should be operated.**

⚠ WARNING

Keep away from the front of the vehicle while the vehicle is in gear on the dynamometer. The vehicle can jump forward and cause serious injury or death.

DRIVE MODE INTEGRATED CONTROL SYSTEM (IF EQUIPPED)

The drive mode may be selected according to the driver's preference or road condition.

The system resets to be in the NORMAL mode, when the engine is restarted.

Information

If there is a problem with the instrument cluster, the drive mode will be in NORMAL mode and may not change to SPORT mode.

The mode changes, as below, whenever the DRIVE MODE button is pressed.

NORMAL mode

In NORMAL mode the engine and transmission control logic work together to provide regular daily driving performance with some fuel efficiency.

- When NORMAL mode is selected, it is not displayed on the instrument cluster.

SPORT mode

SPORT mode manages the driving dynamics by automatically adjusting the steering effort, and the engine and transmission control logic for enhanced driving performance.

- When SPORT mode is selected by pressing the DRIVE MODE button, the SPORT indicator will illuminate.
- Whenever the engine is restarted, the Drive Mode will revert back to NORMAL mode. If SPORT mode is desired, re-select SPORT mode from the DRIVE MODE button.
- When SPORT mode is activated:
  - The engine rpm will tend to remain a little higher for a brief time even after releasing the accelerator. This is a typical when the SPORT mode is activated.
  - Upshifts are delayed when accelerating

Information

In SPORT mode, the fuel efficiency may decrease.

BLIND-SPOT COLLISION WARNING (BCW) SYSTEM (IF EQUIPPED)

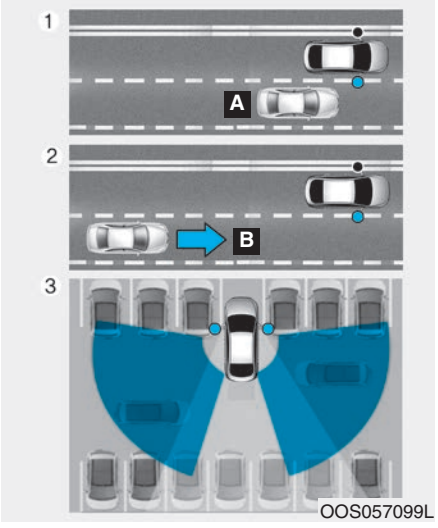

[A] : Blind spot area

[B] : Closing at high speed

The Blind-spot Collision Warning (BCW) system uses radar sensors in the rear bumper to monitor and warn the driver of an approaching vehicle in the driver's blind spot area.

The system monitors the rear area of the vehicle and provides information to the driver with an audible alert and an indicator on the outer side view mirrors.

(1) Blind-spot Collision Warning (BCW)

The Blind-spot Collision Warning (BCW) range varies relative to vehicle speed. Note that if your vehicle is traveling much faster than the vehicles around you, the warning will not occur.

(2) BCW : Closing at high speed

The BCW-Closing at high speed feature will alert you when a vehicle is approaching in an adjacent lane at a high rate of speed. If the driver activates the turn signal when the system detects an oncoming vehicle, the system sounds an audible alert.

(3) RCCW (Rear Cross-Traffic Collision Warning)

The RCCW feature monitors approaching cross traffic from the left and right side of the vehicle when your vehicle is in reverse. The feature will operate when the vehicle is moving in reverse below about 6 mph (10 km/h). If oncoming cross traffic is detected a warning chime will sound. The time of alert varies according to the speed difference between you and the approaching vehicle.

⚠ WARNING

- **Always be aware of road conditions while driving and be alert for unexpected situations even though the Blind-spot Collision Warning (BCW) system is operating.**
- **The Blind-spot Collision Warning (BCW) system is not a substitute for proper and safe driving. Always drive safely and use caution when changing lanes or backing up the vehicle. The Blind-spot Collision Warning (BCW) system may not detect every object alongside the vehicle.**

BCW (Blind-spot Collision Warning)

Operating conditions

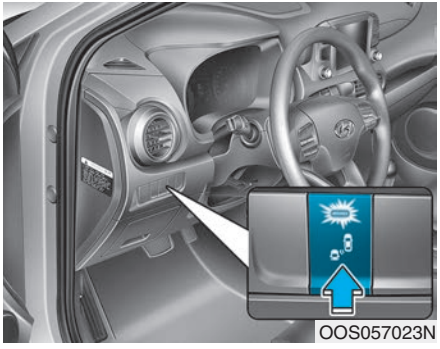

To operate:

Press the BCW switch with the ignition switch in the ON position.

The indicator on the BCW switch will illuminate.

To cancel:

Press the BCW switch again. The indicator on the switch will go off.

When the system is not used, turn the system off by turning off the switch.

Information

- **If the ignition switch is turned OFF and then ON again, the BCW system returns to the previous state.**
- **When the system is turned on, the warning light will illuminate for 3 seconds on the outer side view mirror.**

The function will activate when:

1. The system is on.
2. The vehicle speed is above approximately 20 mph (30 km/h).
3. An oncoming vehicle is detected in the blind spot area.

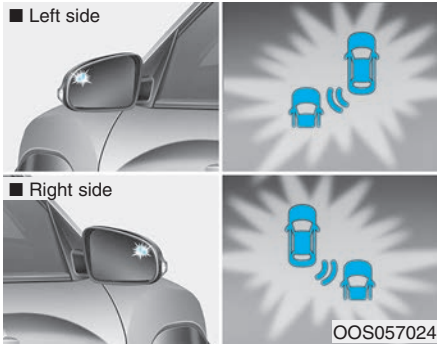

First stage alert

If a vehicle is detected within the boundary of the system, a warning light will illuminate on the outer side view mirror.

Once the detected vehicle is no longer within the blind spot area, the warning will turn off depending on the driving conditions of the vehicle.

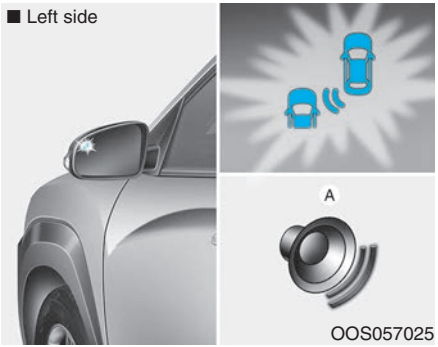

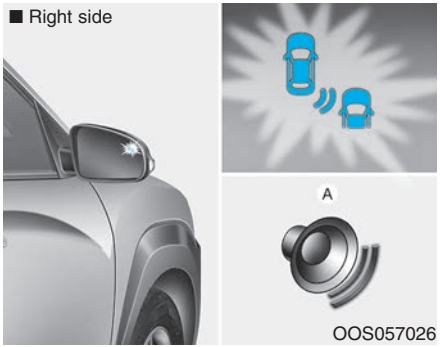

[A] : Warning sound

Second stage alert

A warning chime to alert the driver will activate when:

1. A vehicle has been detected in the blind spot area by the radar system (the warning light will illuminate on the outer side view mirror) AND
2. The turn signal is applied (same side as where the vehicle is being detected).

When this alert is activated, the warning light on the side view mirror will also blink.

If you turn off the turn signal indicator, the warning chime will be deactivated.

- The second stage alarm may be deactivated.

  - To deactivate the warning chime:

  Go to the "User Settings → Driver Assistance and deselect Blind-spot Collision Warning sound" on the LCD display.

  - To activate the warning chime:

  Go to the "User Settings → Driver Assistance and select Blind-spot Collision Warning sound" on the LCD display.

Information

The warning chime function helps alert the driver. Deactivate this function only when it is necessary.

RCCW (Rear Cross-Traffic Collision Warning)

The Rear Cross-Traffic Collision Warning function monitors approaching cross traffic from the left and right side of the vehicle when your vehicle is in reverse.

Operating conditions

To operate:

Go to the 'User Settings → Driver Assistance and select Rear Cross-Traffic Collision Warning' on the LCD display. **(For more information, refer to "LCD Display" in chapter 3.)**

The system will turn on and standby to activate. The system will activate when vehicle speed is below 6 mph (10 km/h) and with the shift lever in R (Reverse).

Information

The Rear Cross-Traffic Collision Warning (RCCW) detecting range is approximately 1 - 65 ft (0.5 – 20 m). An approaching vehicle will be detected if their vehicle speed is within 2.5 - 22.5 mph (4 - 36 km/h).

Note that the detecting range may vary under certain conditions. As always, use caution and pay close attention to your surroundings when backing up your vehicle.

Warning type

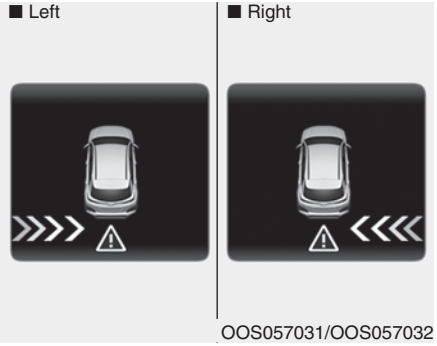

OOS057031/OOS057032

If the vehicle detected by the sensors approaches your vehicle, the warning chime will sound, the warning light on the outer side view mirror will blink and a message will appear on the LCD display.

Information

- The warning chime will turn off when:
  - The detected vehicle moves out of the sensing area or
  - when the vehicle is right behind your vehicle or
  - when the vehicle is not approaching your vehicle or
  - when the other vehicle slows down.
- The system may not operate properly due to other factors or circumstances. Always pay attention to your surroundings.
- If the sensing area near the rear bumper is blocked by either a wall or barrier or by a parked vehicle, the system sensing area may be reduced.

WARNING

- The warning light on the outer side view mirror will illuminate whenever a vehicle is detected at the rear side by the system.

  To avoid accidents, do not focus only on the warning light and neglect to see the surrounding of the vehicle.
- Drive safely even though the vehicle is equipped with a Blind-spot Collision Warning (BCW) system and Rear Cross-Traffic Collision Warning (RCCW). Do not solely rely on the system but check your surrounding before changing lanes or backing the vehicle up.

  The system may not alert the driver in some conditions so always check your surroundings while driving.
- The Blind-spot Collision Warning (BCW) system and Rear Cross-Traffic Collision Warning (RCCW) are not a substitute for proper and safe driving practices. Always drive safely and use caution when changing lanes or backing up your vehicle. The Blind-spot Collision Warning (BCW) system may not detect every object alongside the vehicle.

NOTICE

- The system may not work properly when the bumper has been damaged, or if the rear bumper has been replaced or repaired.
- The sensing range differs somewhat according to the width of the road. When the road is narrow, the system may detect other vehicles in the next lane OR when the road is wide, the system may not detect other vehicles in the next lane.
- The system may turn off due to strong electromagnetic waves.

Blind Spot Collision Warning - Sensor Location

The sensors are located inside the rear bumper.

Always keep the rear bumper clean for the proper operation of the system.

Warning message

Blind-Spot Collision Warning (BCW) system disabled. Radar blocked

- This warning message may appear when :
  - One or both of the sensors on the rear bumper is blocked by dirt or snow or a foreign object.
  - Driving in rural areas where the BCW sensor does not detect another vehicle for an extended period of time.
  - When there is inclement weather such as heavy snow or rain.
  - A trailer or carrier is installed. To use the BCW system, remove the trailer or carrier from your vehicle.

If any of these conditions occur, the light on the BCW switch and the system will turn off automatically.

When the BCW cancelled warning message is displayed in the cluster, check to make sure that the rear bumper is free from any dirt or snow in the areas where the sensor is located. Remove any dirt, snow, or foreign material that could interfere with the radar sensors.

After any dirt or debris is removed, the BCW system should operate normally after about 10 minutes of driving the vehicle.

If the system still does not operate normally have your vehicle inspected by an authorized HYUNDAI dealer.

i Information

Turn off the system by pressing the BCW switch and deselecting Rear Cross Traffic Alert from the User Settings mode on the cluster, when using a trailer or carrier behind your vehicle.

OOS057078L

Check Blind-Spot Collision Warning (BCW) system

If there is a problem with the BCW system, a warning message will appear and the light on the switch will turn off. The system will turn off automatically. Have your vehicle inspected by an authorized HYUNDAI dealer.

Non-operating condition

The BCW indicator on the outer side view mirror may not illuminate properly when:

- The outer side view mirror housing is damaged.
- The mirror is covered with dirt, snow, or debris.
- The window is covered with dirt, snow, or debris.
- The window is tinted.

Limitations of the System

The driver must be cautious in the below situations, because the system may not detect other vehicles or objects in certain circumstances.

- The vehicle drives on a curved road or through a tollgate.
- The vehicle is turning left or right at a crossroads.
- The sensor is polluted with rain, snow, mud, etc.
- The rear bumper where the sensor is located is covered with a foreign object such as a bumper sticker, a bumper guard, a bike rack, etc.
- The rear bumper is damaged, or the sensor is out of the original default position.
- The vehicle height gets lower or higher due to heavy loading in the luggage compartment, abnormal tire pressure, etc.
- The vehicle drives in inclement weather such as heavy rain or snow.
- There is a fixed object near the vehicle, such as a guardrail, person, animal, etc.

- The vehicle is driven near areas containing metal substances such as a construction zone, railroad, etc.
- A big vehicle is near such as a bus or truck.
- A motorcycle or bicycle is near.
- A flat trailer is near.
- If the vehicle has started at the same time as the vehicle next to you and has accelerated.
- When the other vehicle passes at a very fast speed.
- While changing lanes.
- While going down or up a steep road where the height of the lane is different.
- When the other vehicle approaches very close.
- When a trailer or carrier is installed.
- When the temperature near the rear bumper area is high or low.
- When the sensors are blocked by other vehicles, walls or parking-lot pillars.
- When the detected vehicle also moves back, as your vehicle drives back.
- If there are small objects in the detecting area such as a shopping cart or a baby stroller.
- If there is a low height vehicle such as a sports car.
- When other vehicles are close to your vehicle.
- When the vehicle in the next lane moves two lanes away from you OR when the vehicle two lanes away moves to the next lane to you.
- When driving through a narrow road with many trees or bushes.
- When driving through a large area with few vehicles or structures around, such as a desert, rural area, etc.
- When driving on wet surfaces.

Information

This device complies with Part 15 of the FCC rules.

Operation is subject to the following two conditions:

1. **This device may not cause harmful interference.**
2. **This device must accept any interference received, including interference that may cause undesired operation.**

FORWARD COLLISION-AVOIDANCE ASSIST (FCA) SYSTEM (IF EQUIPPED)

The Forward Collision-avoidance Assist (FCA) system is designed to help detect and monitor the vehicle ahead or detect a pedestrian (if equipped) in the roadway through radar signals and camera recognition to warn the driver that a collision is imminent, and if necessary, apply emergency braking.

⚠ WARNING

Take the following precautions when using the Forward Collision-avoidance Assist (FCA) system:

- **This system is only a supplemental system and it is not intended to, nor does it replace the need for extreme care and attention of the driver. The sensing range and objects detectable by the sensors are limited. Pay attention to the road conditions at all times.**
- **NEVER drive too fast in accordance with the road conditions or while cornering.**
- **Always drive cautiously to prevent unexpected and sudden situations from occurring. The Forward Collision Avoidance system may not always stop the vehicle completely and is only intended to help mitigate a collision that is imminent.**

System Setting and Activation

System setting

- The driver can activate the FCA by placing the ignition switch to the ON position and by selecting:

  "User Settings → Driver Assistance → Forward Collision-Avoidance Assist (FCA)"

The FCA deactivates, when the driver deselects the system setting.

The warning light illuminates on the LCD display, when you cancel the FCA system. The driver can monitor the FCA ON/OFF status on the LCD display. Also, the warning light illuminates when the ESC (Electronic Stability Control) is turned off.

If the warning light remains ON when the FCA is activated, have the system checked by an authorized HYUNDAI dealer.

- The driver can select the initial warning activation time on the LCD display.

  Go to the 'User Settings → Driver assistance → Forward Collision Warning → Late/Normal/Early'.

The options for the initial Forward Collision Warning includes the following:

- Early :

When this condition is selected, the initial Forward Collision Warning is activated earlier than normal. This setting maximizes the amount of distance between the vehicle ahead before the initial warning occurs.

Even though, 'Early' is selected if the front vehicle suddenly stops the initial warning activation time may not seem fast.

- Normal :

When this condition is selected, the initial Forward Collision Warning is activated normally. This setting allows for a nominal amount of distance between the vehicle or pedestrian ahead before the initial warning occurs.

- Late :

When this condition is selected, the initial Forward Collision Warning is activated later than normal. This setting reduces the amount of distance between the vehicle or pedestrian ahead before the initial warning occurs.

Select 'Late' when traffic is light and when driving speed is slow.

Prerequisite for activation

The FCA system is on and ready when FCA is selected on the LCD display and when the following prerequisites are satisfied:

- The ESC (Electronic Stability Control) is on.
- Driving speed exceeds approximately 6mph (10km/h). (The FCA is only activated within a certain speed range.)
- The system detects a pedestrian or a vehicle in front, which may collide with your vehicle. (The FCA may not be activated or may sound a warning alarm in accordance with the driving situation or vehicle condition.)

⚠ WARNING

- **Completely stop the vehicle on a safe location before operating the switch on the steering wheel to activate /deactivate the FCA system.**
- **The FCA automatically activates upon placing the ignition switch to the ON position. The driver can deactivate the FCA by canceling the system setting on the LCD display.**
- **The FCA automatically deactivates upon canceling the ESC (Electronic Stability Control). When the ESC is canceled, the FCA cannot be activated on the LCD display.**

FCA Warning Message and System Control

The FCA produces warning messages and warning alarms in accordance with the collision risk levels, such as abrupt stopping of the vehicle in front, insufficient braking distance, or pedestrian detection. Also, it controls the brakes in accordance with the collision risk levels.

The driver can select the initial warning activation time in the User Settings in the LCD display. The options for the initial Forward Collision Warning include EARLY, NORMAL, or LATE initial warning time.

Collision Warning (First warning)

This warning message appears on the LCD display with a warning chime. Additionally, some vehicle system intervention occurs by the engine management system to help decelerate the vehicle.

- Your vehicle speed may decelerate moderately.
- The FCA system limitedly controls the brakes to preemptively mitigate impact in a collision.

Emergency Braking (Second warning)

OOS057017L

This warning message appears on the LCD display with a warning chime.

Additionally, some vehicle system intervention occurs by the engine management system to help decelerate the vehicle.

- The FCA system limitedly controls the brakes to preemptively mitigate impact in a collision. The brake control is maximized just before a collision.

Brake operation

- In an urgent situation, the braking system enters into the ready status for prompt reaction against the driver's depressing the brake pedal.
- The FCA provides additional braking power for optimum braking performance, when the driver depresses the brake pedal.
- The braking control is automatically deactivated, when the driver sharply depresses the accelerator pedal, or when the driver abruptly operates the steering wheel.
- The FCA braking control is automatically canceled, when risk factors disappear.

⚠ CAUTION

The driver should always use extreme caution while operating the vehicle, whether or not there is a warning message or alarm from the FCA system.

⚠ WARNING

The FCA braking control cannot completely stop the vehicle nor avoid all collisions. The driver should hold the responsibility to safely drive and control the vehicle.

⚠ WARNING

The FCA system logic operates within certain parameters, such as the distance from the vehicle or pedestrian ahead, the speed of the vehicle ahead, and the driver's vehicle speed. Certain conditions such as inclement weather and road conditions may affect the operation of the FCA system.

⚠ WARNING

Never deliberately drive dangerously to activate the system.

FCA Sensor

■ Front radar

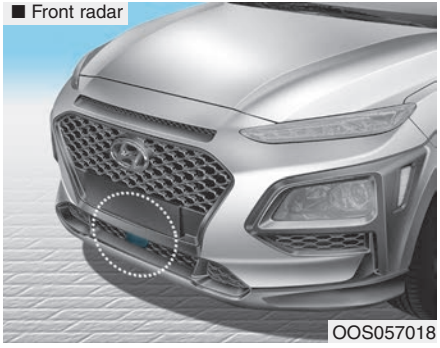

OOS057018

■ Front camera

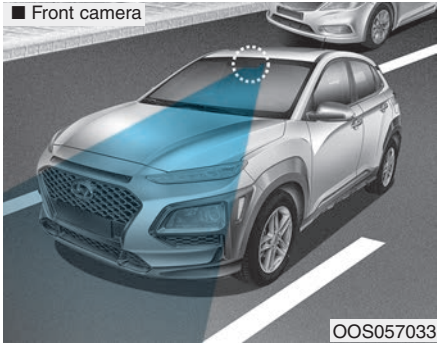

OOS057033

In order for the FCA system to operate properly, always make sure the sensor cover or sensor is clean and free of dirt, snow, and debris.

Dirt, snow, or foreign substances on the sensor cover or sensor may adversely affect the sensing performance of the sensor.

NOTICE

- **Do not apply license plate frame or foreign objects such as a bumper sticker or a bumper guard near the radar sensor. Doing so may adversely affect the sensing performance of the radar.**
- **Always keep the radar sensor and cover clean and free of dirt and debris.**
- **Use only a soft cloth to wash the vehicle. Do not spray pressurized water directly on the sensor or sensor cover.**
- **Be careful not to apply unnecessary force on the radar sensor or sensor cover. If the sensor is forcibly moved out of proper alignment, the FCA system may not operate correctly. In this case, a warning message may not be displayed. Have the vehicle inspected by an authorized HYUNDAI dealer.**
- **If the front bumper becomes damaged in the area around the radar sensor, the FCA system may not operate properly. Have the vehicle inspected by an authorized HYUNDAI dealer.**
- **Use only genuine HYUNDAI parts to repair or replace a damaged sensor or sensor cover. Do not apply paint to the sensor cover.**

NOTICE

- **NEVER install any accessories or stickers on the front windshield, nor tint the front windshield.**
- **NEVER locate any reflective objects (i.e. white paper, mirror) over the dashboard. Any light reflection may cause a malfunction of the system.**
- **Pay extreme caution to keep the camera out of water.**
- **NEVER disassemble the camera assembly, nor apply any impact on the camera assembly.**
- **Playing the vehicle audio system at high volume may offset the system warning sounds.**

Information

Have the system checked by an authorized HYUNDAI dealer when:

- **The windshield glass is replaced.**
- **The sensor cover or sensor gets damaged or replaced.**

Warning message and warning light

OOS057080L

Forward Collision Avoidance Assist (FCA) system disabled. Radar blocked

When the sensor cover is blocked with dirt, snow, or debris, the FCA system operation may stop temporarily. If this occurs, a warning message will appear on the LCD display. Remove any dirt, snow, or debris and clean the radar sensor cover before operating the FCA system.

The FCA may not properly operate in an area (e.g. open terrain), where any substances are not detected after turning ON the engine.

System Malfunction

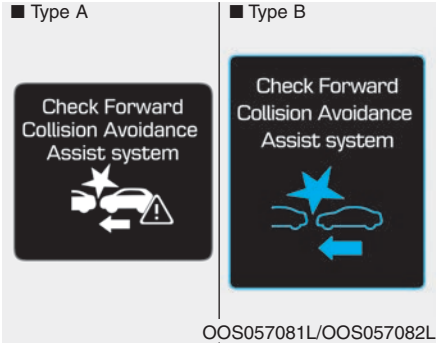

OOS057081L/OOS057082L

Check Forward Collision Avoidance Assist system

- When the FCA is not working properly, the FCA warning light ( ) will illuminate and the warning message will appear for a few seconds. After the message disappears, the master warning light ( ) will illuminate. In this case, have the vehicle inspected by an authorized HYUNDAI dealer.
- The FCA warning message may appear along with the illumination of the ESC (Electronic Stability Control) warning light.

⚠ WARNING

- The FCA is only a supplemental system for the driver's convenience. The driver should hold the responsibility to control the vehicle operation. Do not solely depend on the FCA system. Rather, maintain a safe braking distance, and, if necessary, depress the brake pedal to reduce the driving speed.
- In certain instances and under certain driving conditions, the FCA system may activate prematurely. This initial warning message appears on the LCD display with a warning chime.

  Also, in certain instances the front radar sensor or camera recognition system may not detect the vehicle or pedestrian ahead. The FCA system may not activate and the warning message will not be displayed.

- If there is a malfunction with the FCA system, the Forward Collision avoidance assist system is not applied even though the braking system is operating normally.
- If the vehicle in front stops suddenly, you may have less control of the brake system. Therefore, always keep a safe distance between your vehicle and the vehicle in front of you.
- The FCA system may activate during braking and the vehicle may stop suddenly shifting loose objects toward the passengers. Always keep loose objects secured.
- The FCA system may not activate if the driver applies the brake pedal to avoid a collision.
- The brake control may be insufficient, possibly causing a collision, if a vehicle in front abruptly stops. Always pay extreme caution.

- Occupants may get injured, if the vehicle abruptly stops by the activated FCA system. Pay extreme caution.

⚠ WARNING

- The FCA system operates only to detect vehicles or pedestrians in front of the vehicle.
- The FCA system does not operate when the vehicle is in reverse.
- The FCA system is not designed to detect other objects on the road such as animals.
- The FCA system does not detect vehicles in the opposite lane.
- The FCA system does not detect cross traffic vehicles that are approaching.

- **The FCA system cannot detect the driver approaching the side view of a parked vehicle (for example on a dead end street.)**

In these cases, you must maintain a safe braking distance, and if necessary, depress the brake pedal to reduce the driving speed in order to maintain a safe distance.

Limitations of the System

The Forward Collision avoidance assist (FCA) system is designed to monitor the vehicle ahead or a pedestrian on the roadway through radar signals and camera recognition to warn the driver that a collision is imminent, and if necessary, apply emergency braking.

In certain situations, the radar sensor or the camera may not be able to detect the vehicle or pedestrian ahead. In these cases, the FCA system may not operate normally. The driver must pay careful attention in the following situations where the FCA operation may be limited.

Detecting vehicles

The sensor may be limited when:

- The radar sensor or camera is blocked with a foreign object or debris
- Inclement weather such as heavy rain or snow obscures the field of view of the radar sensor or camera
- There is interference by electromagnetic waves
- There is severe irregular reflection from the radar sensor
- The radar/camera sensor recognition is limited
- The vehicle in front is too small to be detected (for example a motorcycle or a bicycle, etc.)
- The vehicle in front is an oversize vehicle or trailer that is too big to be detected by the camera recognition system (for example a tractor trailer, etc.)
- The driver's field of view is not well illuminated (either too dark or too much reflection or too much backlight that obscures the field of view)
- The vehicle in front does not have their rear lights properly turned ON

- The outside brightness changes suddenly, for example when entering or exiting a tunnel
- Light coming from a street light or an oncoming vehicle is reflected on a wet road surface such as a puddle in the road
- The field of view in front is obstructed by sun glare
- The windshield glass is fogged up; a clear view of the road is obstructed
- The vehicle in front is driving erratically
- The vehicle drives through a construction area, on an unpaved road, or above metal materials, such as a railway
- The vehicle drives inside a building, such as a basement parking lot
- The adverse road conditions cause excessive vehicle vibrations while driving
- The vehicle in front is moving vertically to the driving direction
- The vehicle in front is stopped vertically
- The vehicle in front is driving towards your vehicle or reversing

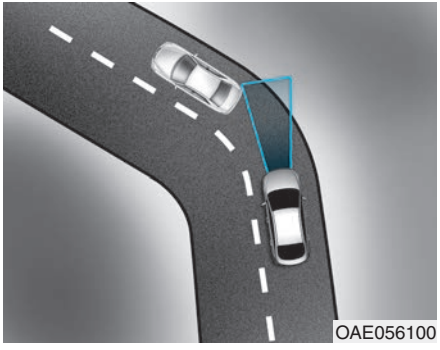
OAE056100

- Driving on a curve

The performance of the FCA system may be limited when driving on a curved road.

In certain instances on a curved road, the FCA system may activate prematurely.

Also, in certain instances the front radar sensor or camera recognition system may not detect the vehicle traveling on a curved road.

In these cases, the driver must maintain a safe braking distance, and if necessary, depress the brake pedal to reduce your driving speed in order to maintain a safe distance.

OAE056101

The FCA system may recognize a vehicle in the next lane when driving on a curved road.

In this case, the system may unnecessarily alarm the driver and apply the brake.

Always pay attention to road and driving conditions, while driving. If necessary, depress the brake pedal to reduce your driving speed in order to maintain a safe distance.

Also, when necessary depress the accelerator pedal to prevent the system from unnecessarily decelerating your vehicle.

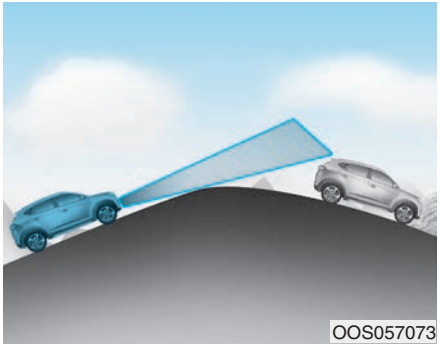

- Driving on a slope

The performance of the FCA decreases while driving upward or downward on a slope, not recognizing the vehicle in front in the same lane. It may unnecessarily produce the warning message and the warning alarm, or it may not produce the warning message and the warning alarm at all.

When the FCA suddenly recognizes the vehicle in front while passing over a slope, you may experience sharp deceleration.

Always keep your eyes forward while driving upward or downward on a slope, and, if necessary, depress the brake pedal to reduce your driving speed in order to maintain distance.

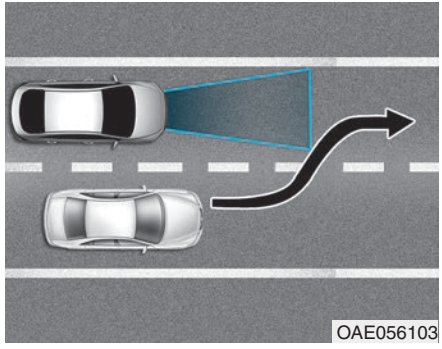

- Changing lanes

When a vehicle changes lanes in front of you, the FCA system may not immediately detect the vehicle, especially if the vehicle changes lanes abruptly. In this case, you must maintain a safe braking distance, and if necessary, depress the brake pedal to reduce your driving speed in order to maintain a safe distance.

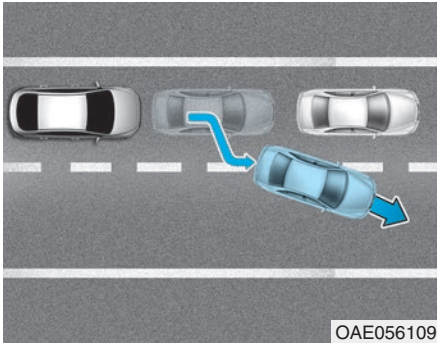

When driving in stop-and-go traffic, and a stopped vehicle in front of you merges out of the lane, the FCA system may not immediately detect the new vehicle that is now in front of you. In this case, you must maintain a safe braking distance, and if necessary, depress the brake pedal to reduce your driving speed in order to maintain a safe distance.

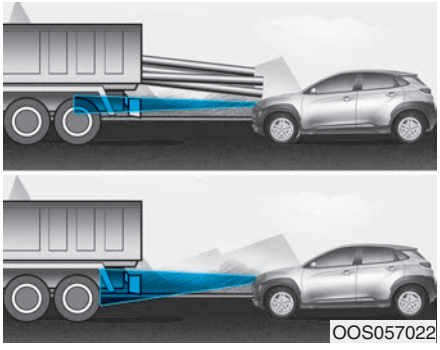

- Detecting the vehicle in front of you

If the vehicle in front of you has cargo that extends rearward from the cab, or when the vehicle in front of you has higher ground clearance, additional special attention is required. The FCA system may not be able to detect the cargo extending from the vehicle. In these instances, you must maintain a safe braking distance from the rearmost object, and if necessary, depress the brake pedal to reduce your driving speed in order to maintain distance.

Detecting pedestrians (if equipped)

The sensor may be limited when:

- The pedestrian is not fully detected by the camera recognition system, for example, if the pedestrian is leaning over or is not fully walking upright
- The pedestrian is moving very quickly or appears abruptly in the camera detection area
- The pedestrian is wearing clothing that easily blends into the background, making it difficult to be detected by the camera recognition system
- The outside lighting is too bright (e.g. when driving in bright sunlight or in sun glare) or too dark (e.g. when driving on a dark rural road at night)
- It is difficult to detect and distinguish the pedestrian from other objects in the surroundings, for example, when there is a group of pedestrians or a large crowd
- There is an item similar to a person's body structure
- The pedestrian is small
- The pedestrian has impaired mobility
- The sensor recognition is limited
- The radar sensor or camera is blocked with a foreign object or debris
- Inclement weather such as heavy rain or snow obscures the field of view of the radar sensor or camera
- When light coming from a street light or an oncoming vehicle is reflected on a wet road surface such as a puddle in the road
- The field of view in front is obstructed by sun glare
- The windshield glass is fogged up; a clear view of the road is obstructed
- The adverse road conditions cause excessive vehicle vibrations while driving

Information

In some instances, the FCA system may be canceled when subjected to electromagnetic interference.

Information

This device complies with Part 15 of the FCC rules.

Operation is subject to the following two conditions:

1. This device may not cause harmful interference.
2. This device must accept any interference received, including interference that may cause undesired operation.

WARNING

- Do not use the Forward Collision avoidance Assist (FCA) system when towing a vehicle. Application of the FCA system while towing may adversely affect the safety of your vehicle or the towing vehicle.
- Use extreme caution when the vehicle in front of you has cargo that extends rearward from the cab, or when the vehicle in front of you has higher ground clearance.
- The FCA system is designed to detect and monitor the vehicle ahead or detect a pedestrian in the roadway through radar signals and camera recognition. It is not designed to detect bicycles, motorcycles, or smaller wheeled objects such as luggage bags, shopping carts, or strollers.
- Never try to test the operation of the FCA system. Doing so may cause severe injury or death.

LANE KEEPING ASSIST (LKA) SYSTEM (IF EQUIPPED)

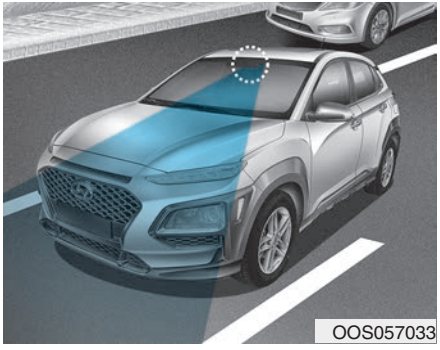

The Lane Keeping Assist (LKA) system helps detect lane markers on the road with a camera at the front windshield, and assists the driver's steering to help keep the vehicle between lanes.

When the system detects the vehicle straying from its lane, it alerts the driver with a visual and audible warning, while applying a slight counter-steering torque, to try to prevent the vehicle from moving out of its lane.

⚠ WARNING

The Lane Keeping Assist (LKA) system is not a substitute for safe driving practices, but a convenience function only. It is the responsibility of the driver to always be aware of the surrounding and steer the vehicle.

⚠ WARNING

Take the following precautions when using the Lane Keeping Assist (LKA) system:

- **Do not steer the steering wheel suddenly when the steering wheel is being assisted by the system.**
- **LKA system helps to prevent the driver from moving out of the lane unintentionally by assisting the driver's steering. However, the driver should not solely rely on the system but always pay attention on the steering wheel to stay in the lane.**
- **The operation of the LKA system can be canceled or not work properly according to road condition and surroundings. Always be cautious when driving.**
- **Do not disassemble the LKA system camera temporarily to tint the window or attach any types of coatings and accessories. If you disassemble the camera and assemble it again, take your vehicle to an authorized HYUNDAI dealer and have the system checked for calibration.**
- **When you replace the windshield glass, LKA system camera or related parts of the steering wheel, take your vehicle to an authorized HYUNDAI dealer and have the system checked for calibration.**

- **The system detects lane lines and controls the steering wheel by a camera, therefore, if the lane lines are hard to detect, the system may not work properly.**

  Please refer to "Limitations of the system".
- **Do not remove or damage the related parts of LKA system.**
- **You may not hear a warning sound of LKA system because of excessive audio sound.**
- **Do not place objects on the dashboard that reflects light such as mirrors, white paper, etc. The system may malfunction if the sunlight is reflected.**

- **Always have your hands on the steering wheel while the LKA system is activated. If you continue to drive with your hands off the steering wheel after the "Keep hands on steering wheel" warning message appears, the system will turn off automatically.**
- **The steering wheel is not continuously controlled so if the vehicle speed is at a higher speed when leaving a lane the vehicle may not be able to be controlled by the system. The driver must always follow the speed limit when using the system.**
- **If you attach objects to the steering wheel, the system may not assist steering or the hands off alarm may not work properly. When you tow a trailer, make sure that you turn off the LKA system.**

LKA System Operation

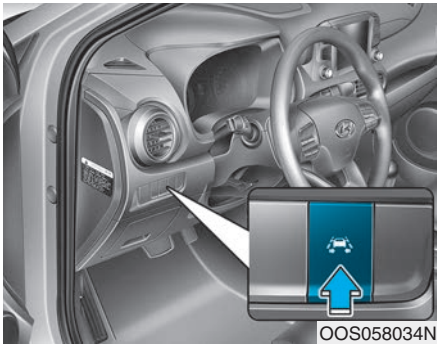
OOS058034N

To activate/deactivate the LKA system:

With the ignition switch in the ON position, press the LKA system button located on the instrument panel on the left hand side of the steering wheel. The indicator in the cluster display will initially illuminate white. This indicates the LKA system is in the READY but NOT ENABLED state.

The color of indicator will change depending on the condition of LKA system.

- White : Sensor does not detect lane lines or vehicle speed is under 40mph (64 km/h).
- Green : Sensor detects lane lines and the system is able to control vehicle steering.

LKA system operation

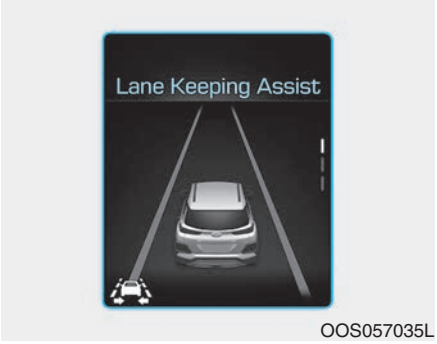

OOS057035L

- To see the LKA system screen on the LCD display in the cluster, select Assist mode ( ). For more details, refer to "LCD Display Modes" in chapter 3.
- When both lane lines are detected and all the conditions to activate the LKA system are satisfied, a green steering wheel indicator will illuminate and the LKA system indicator light will change from white to green. This indicates that the LKA system is in the ENABLED state and the steering wheel will be able to be controlled.

⚠ WARNING

The Lane Keeping Assist (LKA) system is a system to help prevent the driver from leaving the lane. However, the driver should not solely rely on the system but always check the road conditions when driving.

OOS057035L/OOS057037L

- If the system detects a lane line, the color changes from gray to white.
- If the system detects the left lane line, the left lane line color will change from gray to white.
- If the system detects the right lane line, the right lane line color will change from gray to white.
- Both lane lines must be detected for the system to fully activate.

- If your vehicle speed exceeds 40 mph (64 km/h) and the LKA system button is ON, the system is enabled. If your vehicle departs from the projected lane in front of you, the LKA system operates as follows:

OOS057038L/OOS057039L

A visual warning appears on the cluster LCD display. Either the left lane line or the right lane line in the cluster LCD display will blink depending on which direction the vehicle is veering.

If the steering wheel appears, the system will help control the vehicle's steering to prevent the vehicle from crossing the lane line.

OAEE056129L

Keep hands on steering wheel

If the driver takes their hands off the steering wheel for several seconds while the LKA system is activated, the system will warn the driver.

Information

If the steering wheel is held very lightly the message may still appear because the LKA system may not recognize that the driver has their hands on the wheel.

⚠ WARNING

The warning message may appear late according to road conditions. Therefore, always have your hands on the steering wheel while driving.

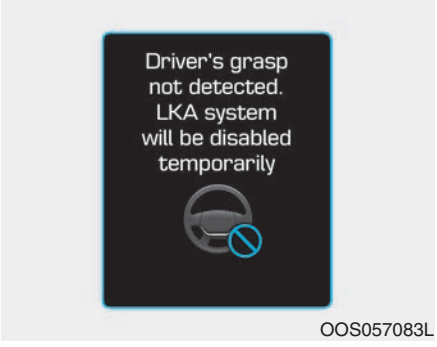

OOS057083L

Driver's grasp not detected. LKA system will be disabled temporarily

If the driver still does not have their hands on the steering wheel after the message "Keep hands on steering wheel", the system will not control the steering wheel and warn the driver only when the driver crosses the lane lines.

However, if the driver has their hands on the steering wheel again, the system will start controlling the steering wheel.

⚠ WARNING

- **The driver is responsible for accurate steering.**
- **Turn off the system in below situations.**
  - **In bad weather**
  - **In bad road condition**
  - **When the steering wheel needs to be controlled by the driver frequently.**

ℹ Information

- **Even though the steering is assisted by the system, the driver can still steer to control the steering wheel.**
- **The steering wheel may feel heavier when the steering wheel is assisted by the system than when it is not.**

Warning Light and Message

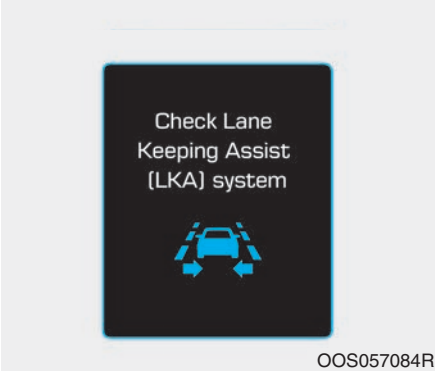

OOS057084R

Check LKA system

If there is a problem with the system a message will appear for a few seconds. If the problem continues the LKA system failure indicator will illuminate.

LKA system failure indicator

The LKA system failure indicator (yellow) will illuminate if the LKA system is not working properly. Have your vehicle checked by an authorized HYUNDAI dealer.

When there is a problem with the system do one of the following:

- Turn the system on after turning the engine off and on again.
- Check if the ignition switch is in the ON position.
- Check if the system is affected by the weather. (ex: fog, heavy rain, etc.)
- Check if there is foreign matter on the camera lens.

If the problem is not solved, have your vehicle checked by an authorized HYUNDAI dealer.

The LKA system will not be in the ENABLED state and the steering wheel will not be assisted when:

- The turn signal is turned on before changing a lane. If you change lanes without the turn signal on, the steering wheel might be controlled.
- The vehicle is not driven in the middle of the lane when the system is turned on or right after changing a lane.
- ESC (Electronic Stability Control) is activated.
- The vehicle is driven on a sharp curve.
- Vehicle speed is below 40 mph (60 km/h) and over 110 mph (180 km/h).
- The vehicle makes sharp lane changes.
- The vehicle brakes suddenly.
- Only one lane line is detected.
- The lane is very wide or narrow.
- There are more than two lane lines on the road. (e.g. construction area)
- The vehicle is driven on a steep incline.

Limitations of the System

The LKA system may operate prematurely even if the vehicle does not depart from the intended lane, OR, the LKA system may not warn you if the vehicle leaves the intended lane under the following circumstances:

When the lane and road conditions are poor

- It is difficult to distinguish the lane marking from the road surface or the lane marking is faded or not clearly marked.
- There are markings on the road surface that look like a lane line that is inadvertently being detected by the camera.
- The lane line is merged or divided. (e.g. tollgate)
- The lane number increases or decreases or the lane marker are crossing complicatedly.
- There are more than two lane lines on the road in front of you.
- The lane line is very thick or thin.
- The lanes ahead are not visible due to rain, snow, water on the road, damaged or stained road surface, or other factors.
- The shadow is on the lane marker by a median strip, trees, etc.
- The lanes are incomplete or the area is in a construction zone.
- There are crosswalk signs or other symbols on the road.
- The lane line in a tunnel is stained with oil, etc.

When external condition is intervened

- The brightness outside changes suddenly such as when entering or exiting a tunnel or passing under a bridge.
- The brightness outside is too low such as when the headlamps are not on at night or the vehicle is going through a tunnel or passing under a bridge.
- There is a boundary structure in the roadway such as a concrete barrier, guardrail and reflector post that is inadvertently being detected by the camera.
- When light coming from a street light or an oncoming vehicle is reflected on a wet road surface such as a puddle in the road.
- The field of view in front is obstructed by sun glare.
- The lane suddenly disappears such as at the intersection.
- There is not enough distance between you and the vehicle in front to be able to detect the lane line or the vehicle ahead is driving on the lane line.
- Driving on a steep grade, over a hill, or when driving on a curved road.
- The adverse road conditions cause excessive vehicle vibrations while driving.
- The surrounding of the inside rear view mirror temperature is high due to direct sunlight.

When front visibility is poor

- The windshield or the LKA system camera lens is blocked with dirt or debris.
- The windshield glass is fogged up; a clear view of the road is obstructed.
- Placing objects on the dashboard, etc.

LKA system Function Change

The driver can change LKA to Lane Departure Warning (LDW) system or change the LKA system mode between Standard LKA and Active LKA from the LCD display. Go to the 'User Settings → Driver Assistance → Lane Keeping Assist → Lane Departure Warning/Standard LKA/Active LKA'.

Lane Departure Warning

LDW system alerts the driver with a visual warning and a warning alarm when the system detects the vehicle departing the lane. The steering wheel will not be controlled.

Standard LKA

The Standard LKA mode guides the driver to help keep the vehicle within the lanes. It rarely controls the steering wheel, when the vehicle drives well inside the lanes. However, it starts to control the steering wheel, when the vehicle is about to deviate out of the lanes.

Active LKA

The Active LKA mode provides more frequent steering wheel control in comparison with the Standard LKA mode. Active LKA can help reduce the driver's fatigue to assist the steering for maintaining the vehicle in the middle of the lane.

Information

This device complies with Part 15 of the FCC rules.

Operation is subject to the following two conditions:

1. **This device may not cause harmful interference.**
2. **This device must accept any interference received, including interference that may cause undesired operation.**

DRIVER ATTENTION WARNING (DAW) SYSTEM (IF EQUIPPED)

The Driver Attention Warning (DAW) System is designed as a safety feature to help reduce drowsy or inattentive driving. The DAW displays a bar graph that is intended to represent the driver's attention and fatigue level while driving.

System Setting and Activation

System setting

- The Driver Attention Warning (DAW) system is set to be in the OFF position, when your vehicle is first delivered to you from the factory.
- To turn ON the Driver Attention Warning (DAW) system, turn on the engine, and then select 'User Settings → Driver Assistance → Driver Attention Warning → High Sensitivity/Normal Sensitivity' on the LCD display.
- The driver can select the mode of the Driver Attention Warning (DAW) system.
  - Off : The Driver Attention Warning (DAW) system is deactivated.
  - Normal Sensitivity : The Driver Attention Warning (DAW) system helps alert the driver of his/her fatigue level or inattentive driving practices.
  - High Sensitivity : The Driver Attention Warning (DAW) system helps alert the driver of his/her fatigue level or inattentive driving practices faster than Normal mode.
- The set-up of the Driver Attention Warning (DAW) system will be maintained, as selected, when the engine is re-started.

Driver's attention level

■ System off

OOS057085L

■ Attentive driving

OPDE056061

■ Inattentive driving

OPDE056062

- The driver can monitor their driving conditions on the LCD display.

  The DAW screen will appear when you select the Assist mode tab ( ) on the LCD display if the system is activated. (For more information, refer to "LCD Display Modes" in chapter 3.)
- The driver's attention level is displayed on the scale of 1 to 5. The lower the number is, the more inattentive the driver is.
- The number decreases when the driver does not take a break for a certain period of time.
- The number increases when the driver attentively drives for a certain period of time.
- When the driver turns on the system while driving, it displays 'Last Break time' and level.

Take a break

OPDE056063

- The "Consider taking a break" message appears on the LCD display and a warning sounds in order to suggest the driver to take a break, when the driver's attention level is below 1.
- The Driver Attention Warning (DAW) system does not suggest the driver to take a break, when the total driving time is shorter than 10 minutes.

Resetting the System

- The last break time is set to 00:00 and the driver's attention level is set to 5 (very attentive) when the driver resets the Driver Attention Warning (DAW) system.
- The Driver Attention Warning (DAW) system resets in the following situations.
  - The engine is turned OFF.
  - The driver unfastens the seat belt and then opens the driver's door.
  - The vehicle is stopped for more than 10 minutes.
- The Driver Attention Warning (DAW) system operates again, when the driver restarts driving.

System Standby

OOS057086L

The Driver Attention Warning (DAW) system enters the ready status and displays the 'Standby' screen in the following situations.

- The camera does not detect the lanes.
- Driving speed remains under 40 mph (60 km/h) or over 125 mph (200 km/h).

System Malfunction

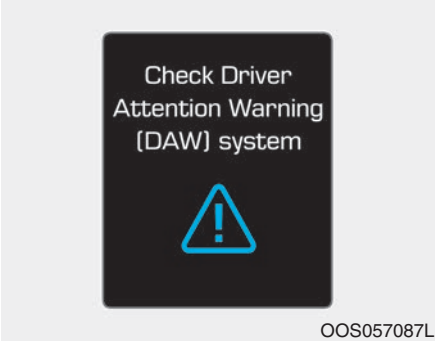

OOS057087L

Check Driver Attention Warning (DAW) system

When the warning message appears, the system is not working properly. In this case, have the vehicle inspected by an authorized HYUNDAI dealer.

⚠ WARNING

- **The Driver Attention Warning (DAW) system is not a substitute for safe driving practices, but a convenience function only. It is the responsibility of the driver to always drive cautiously to prevent unexpected and sudden situations from occurring. Pay attention to the road conditions at all times.**
- **The system may suggest a break according to the driver's driving pattern or habits even if the driver doesn't feel fatigue.**
- **The driver, who feels fatigued, should take a break, even though there is no break suggestion by the Driver Attention Warning (DAW) system.**

NOTICE

The Driver Attention Warning system utilizes the camera sensor on the front windshield for its operation. To keep the camera sensor in the best condition, you should observe the followings:

- **NEVER install any accessories or stickers on the front windshield, nor tint the front windshield.**
- **NEVER locate any reflective objects (i.e. white paper, mirror) over the dashboard. Any light reflection may cause a malfunction of the Driver Attention Alert (DAW) system.**
- **Pay extreme caution to keep the camera sensor out of water.**
- **NEVER arbitrarily disassemble the camera assembly, nor apply any impact on the camera assembly.**

⚠ CAUTION

The Driver Attention Warning (DAW) system may not properly operate with limited alerting in the following situations:

- **The lane detection performance is limited. (For more information, refer to "Lane Keeping Assist (LKA) system" in this chapter.)**
- **The vehicle is violently driven or is abruptly turned for obstacle avoidance (e.g. construction area, other vehicles, fallen objects, bumpy road).**
- **Forward drivability of the vehicle is severely undermined (possibly due to wide variation in tire pressures, uneven tire wear-out, toe-in/toe-out alignment).**
- **The vehicle drives on a curvy road.**
- **The vehicle drives on a bumpy road.**
- **The vehicle drives through a windy area.**
- **The vehicle is controlled by the following driving assist systems:**
  - **Lane Keeping Assist (LKA) system**
  - **Forward Collision-avoidance Assist (FCA) system**

⚠ CAUTION

Playing the vehicle audio system at high volume may offset the Driver Attention Warning (DAW) system warning sounds.

CRUISE CONTROL

Cruise Control operation

1. Cruise indicator
2. SET indicator

The Cruise Control system allows you to drive at speeds above 20 mph (30 km/h) without depressing the accelerator pedal.

⚠ WARNING

Take the following precautions:

- **Always set the vehicle speed under the speed limit.**
- **If the Cruise Control is left on, (cruise indicator light in the instrument cluster is illuminated) the Cruise Control can be activated unintentionally. Keep the Cruise Control system off (cruise indicator light OFF) when the Cruise Control is not in use, to avoid inadvertently setting a speed.**
- **Use the Cruise Control system only when traveling on open highways in good weather.**
- **Do not use the Cruise Control when it may be unsafe to keep the vehicle at a constant speed.**

- **Do not use when:**
  - **Driving in heavy traffic or when traffic conditions make it difficult to drive at a constant speed**
  - **Driving on rainy, icy, or snow-covered roads**
  - **Driving on hilly or windy roads**
  - **Driving in windy areas**
  - **Driving with limited view (possibly due to bad weather such as fog, snow, rain and sandstorm)**

Information

- **During normal cruise control operation, when the SET switch is activated or reactivated after applying the brakes, the cruise control will energize after approximately 3 seconds. This delay is normal.**
- **Before activating the cruise control function, the system will check to verify that the brake switch is operating normally. Depress the brake pedal at least once after turning ON the ignition or starting the engine.**

To set Cruise Control speed

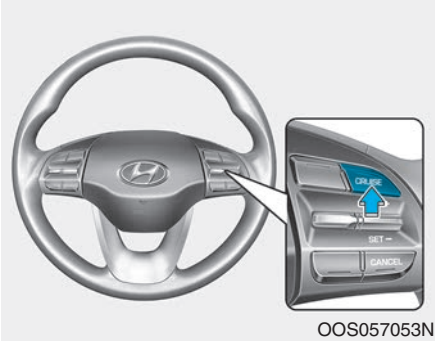

OOS057053N

1. Press the CRUISE button on the steering wheel to turn the system on. The cruise indicator will illuminate.
2. Accelerate to the desired speed, which must be more than 20 mph (30 km/h).

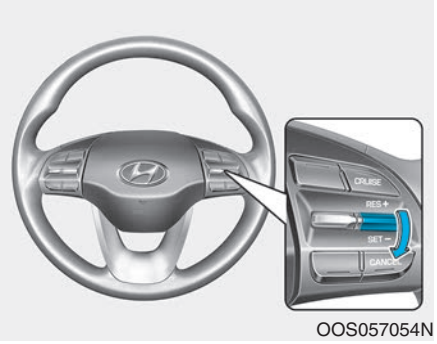

OOS057054N

3. Push the toggle switch down (SET-), and release it. The SET indicator light will illuminate.
4. Release the accelerator pedal.

Information

On a steep slope, the vehicle may slightly slow down or speed up, while driving uphill or downhill.

To increase Cruise Control speed

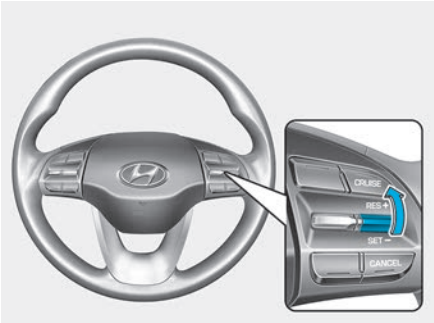

OOS057055N

- Push the toggle switch up (RES+) and hold it, while monitoring the SET speed on the instrument cluster.

  Release the toggle switch when the desired speed is shown and the vehicle will accelerate to that speed.
- Push the toggle switch up (RES+) and release it immediately. The cruising speed will increase 1.0 mph (1.6 km/h) each time the toggle switch is operated in this manner.
- Depress the accelerator pedal. When the vehicle attains the desired speed, push the toggle switch down (SET-).

To decrease Cruise Control speed

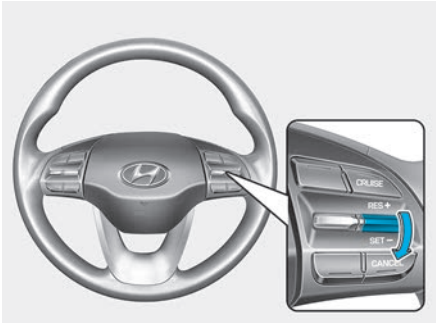

OOS057054N

- Push the toggle switch down (SET-) and hold it. Your vehicle will gradually slow down. Release the toggle switch at the speed you want to maintain.
- Push the toggle switch down (SET-) and release it immediately. The cruising speed will decrease 1.0 mph (1.6 km/h) each time the toggle switch is operated in this manner.
- Lightly tap the brake pedal. When the vehicle attains the desired speed, push the toggle switch down (SET-).

To temporarily accelerate with the Cruise Control ON

Depress the accelerator pedal. When you take your foot off the accelerator, the vehicle will return to the previously set speed.

If you push the toggle switch down (SET-) at the increased speed, the Cruise Control will maintain the increased speed.

Cruise Control will be canceled when:

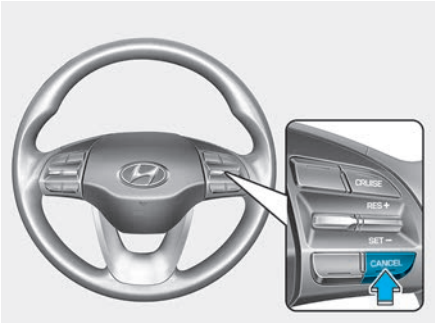

OOS057056N

- Depressing the brake pedal.
- Pressing the CANCEL button located on the steering wheel.
- Pressing the CRUISE button. Both the cruise indicator and the "SET" indicator will turn OFF.
- Moving the shift lever into N (Neutral).(for automatic transmission/dual clutch transmission vehicle)
- Decreasing the vehicle speed to less than approximately 20 mph (30 km/h).
- The ESC (Electronic Stability Control) is operating.
- Downshifting to the 2nd gear in manual shift mode. (for automatic transmission/dual clutch transmission vehicle)

i Information

Each of the above actions will cancel Cruise Control operation (the "SET" indicator in the instrument cluster will go off), but only pressing the CRUISE button will turn the system off. If you wish to resume Cruise Control operation, push the toggle switch up (RES+) located on your steering wheel. You will return to your previously preset speed, unless the system was turned off using the CRUISE button.

To resume preset Cruising speed

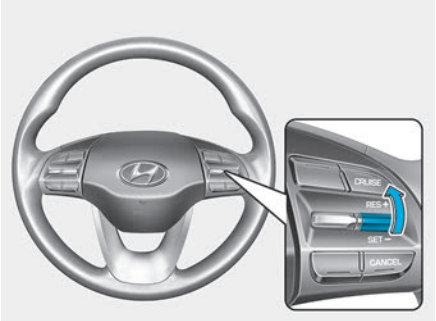

OOS057055N

Push the toggle switch up (RES+). If the vehicle speed is over 20 mph (30 km/h), the vehicle will resume the preset speed.

To turn Cruise Control off

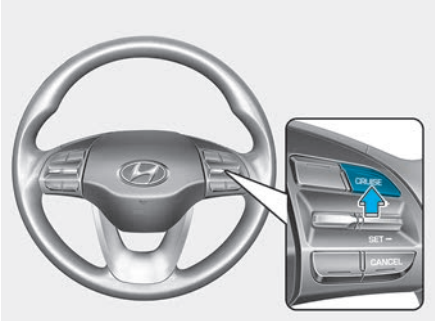

OOS057053N

- Press the CRUISE button (the cruise indicator light will go off).
- Turn the vehicle OFF.

SPECIAL DRIVING CONDITIONS

Hazardous Driving Conditions

When hazardous driving elements are encountered such as water, snow, ice, mud and sand, take the below suggestions:

- Drive cautiously and keep a longer braking distance.
- Avoid abrupt braking or steering.
- When your vehicle is stuck in snow, mud, or sand, use second gear. Accelerate slowly to avoid unnecessary wheel spin.
- Put sand, rock salt, tire chains or other non-slip materials under the wheels to provide additional traction while the vehicle becomes stuck in ice, snow, or mud.

⚠ WARNING

Downshifting with an automatic transmission/dual clutch transmission while driving on slippery surfaces can cause an accident. The sudden change in tire speed could cause the tires to skid. Be careful when downshifting on slippery surfaces.

Rocking the Vehicle

If it is necessary to rock the vehicle to free it from snow, sand, or mud, first turn the steering wheel right and left to clear the area around your front wheels. Then, shift back and forth between R (Reverse) and a forward gear.

Try to avoid spinning the wheels, and do not race the engine.

To prevent transmission wear, wait until the wheels stop spinning before shifting gears. Release the accelerator pedal while shifting, and press lightly on the accelerator pedal while the transmission is in gear. Slowly spinning the wheels in forward and reverse directions causes a rocking motion that may free the vehicle.

⚠ WARNING

If the vehicle is stuck and excessive wheel spin occurs, the temperature in the tires can increase very quickly. If the tires become damaged, a tire blow out or tire explosion can occur. This condition is dangerous - you and others may be injured. Do not attempt this procedure if people or objects are anywhere near the vehicle.

If you attempt to free the vehicle, the vehicle can overheat quickly, possibly causing an engine compartment fire or other damage. Try to avoid spinning the wheels as much as possible to prevent overheating of either the tires or the engine. DO NOT allow the vehicle to spin the wheels above 35 mph (56 km/h).

Information

The ESC system must be turned OFF before rocking the vehicle.

NOTICE

If you are still stuck after rocking the vehicle a few times, have the vehicle pulled out by a tow vehicle to avoid engine overheating, possible damage to the transmission, and tire damage. See "Towing" in chapter 6.

Smooth Cornering

Avoid braking or gear changing in corners, especially when roads are wet. Ideally, corners should always be taken under gentle acceleration.

Driving at Night

Night driving presents more hazards than driving in the daylight. Here are some important tips to remember:

- Slow down and keep more distance between you and other vehicles, as it may be more difficult to see at night, especially in areas where there may not be any street lights.
- Adjust your mirrors to reduce the glare from other driver's headlamps.
- Keep your headlamps clean and properly aimed. Dirty or improperly aimed headlamps will make it much more difficult to see at night.
- Avoid staring directly at the headlamps of oncoming vehicles. You could be temporarily blinded, and it will take several seconds for your eyes to readjust to the darkness.

Driving in the Rain

Rain and wet roads can make driving dangerous. Here are a few things to consider when driving in the rain or on slick pavement:

- Slow down and allow extra following distance. A heavy rainfall makes it harder to see and increases the distance needed to stop your vehicle.
- Turn OFF your Cruise Control.
- Replace your windshield wiper blades when they show signs of streaking or missing areas on the windshield.
- Tires should be properly maintained with at least 2/32nds of an inch of tread depth. If your tires do not have enough tread, making a quick stop on wet pavement can cause a skid and possibly lead to an accident. **See "Tire Tread" in chapter 7**.
- Turn on your headlamps to make it easier for others to see you.

- Driving too fast through large puddles can affect your brakes. If you must go through puddles, try to drive through them slowly.
- If you believe your brakes may be wet, apply them lightly while driving until normal braking operation returns.

Hydroplaning

If the road is wet enough and you are going fast enough, your vehicle may have little or no contact with the road surface and actually ride on the water. The best advice is SLOW DOWN when the road is wet.

The risk of hydroplaning increases as the depth of tire tread decreases, refer to "Tire Tread" in chapter 7.

Driving in Flooded Areas

Avoid driving through flooded areas unless you are sure the water is no higher than the bottom of the wheel hub. Drive through any water slowly. Allow adequate stopping distance because brake performance may be reduced.

After driving through water, dry the brakes by gently applying them several times while the vehicle is moving slowly.

Highway Driving

Tires

Adjust the tire inflation, as specified. Under-inflation may overheat or damage the tires.

Do not install worn-out or damaged tires, which may reduce traction or adversely affect vehicle handling. This could lead to sudden tire failure that may cause loss of vehicle control resulting in an accident.

Information

Never over-inflate your tires above the maximum inflation pressure, as specified on your tires.

Fuel, engine coolant and engine oil

Driving at higher speeds on the highway consumes more fuel and is less efficient than driving at a slower, more moderate speed. Maintain a moderate speed in order to conserve fuel when driving on the highway.

Be sure to check both the engine coolant level and the engine oil before driving.

Drive belt

A loose or damaged drive belt may overheat the engine.

Reducing the risk of a rollover

Your multi-purpose passenger vehicle is defined as a Sports Utility Vehicle (SUV). SUV's have higher ground clearance and a narrower track to make them capable of performing in a wide variety of off-road applications. The specific design characteristics give them a higher center of gravity than ordinary vehicles making them more likely to roll over if you make abrupt turns. Utility vehicles have a significantly higher rollover rate than other types of vehicles. Due to this risk, driver and passengers are strongly recommended to buckle their seat belts. In a rollover crash, an unbelted person is significantly more likely to die than a person wearing a seat belt.

There are steps that a driver can make to reduce the risk of a rollover. If at all possible, avoid sharp turns or abrupt maneuvers, do not load your vehicle with heavy cargo on the roof, and never modify your vehicle in any way.

⚠ WARNING

Utility vehicles have a significantly higher rollover rate than other types of vehicles. To prevent rollovers or loss of control:

- **Take corners at slower speeds than you would with a passenger vehicle.**
- **Avoid sharp turns and abrupt maneuvers.**
- **Do not modify your vehicle in any way that you would raise the center of gravity.**
- **Keep tires properly inflated.**
- **Do not carry heavy cargo on the roof.**

WINTER DRIVING

The severe weather conditions of winter quickly wear out tires and cause other problems. To minimize winter driving problems, you should take the following suggestions:

Snow or Icy Conditions

You need to keep sufficient distance between your vehicle and the vehicle in front of you.

Apply the brakes gently. Speeding, rapid acceleration, sudden brake applications, and sharp turns are potentially very hazardous practices. During deceleration, use engine braking to the fullest extent. Sudden brake applications on snowy or icy roads may cause the vehicle to skid.

To drive your vehicle in deep snow, it may be necessary to use snow tires or to install tire chains on your tires.

Always carry emergency equipment. Some of the items you may want to carry include tire chains, tow straps or chains, a flashlight, emergency flares, sand, a shovel, jumper cables, a window scraper, gloves, ground cloth, coveralls, a blanket, etc.

Snow tires

⚠ WARNING

Snow tires should be equivalent in size and type to the vehicle's standard tires. Otherwise, the safety and handling of your vehicle may be adversely affected.

If you mount snow tires on your vehicle, make sure to use radial tires of the same size and load range as the original tires. Mount snow tires on all four wheels to balance your vehicle's handling in all weather conditions. The traction provided by snow tires on dry roads may not be as high as your vehicle's original equipment tires. Check with the tire dealer for maximum speed recommendations.

i Information

Do not install studded tires without first checking local, state and municipal regulations for possible restrictions against their use.

Tire chains

OOS057008

Since the sidewalls of radial tires are thinner than other types of tires, they may be damaged by mounting some types of tire chains on them. Therefore the use of snow tires is preferred over the use of tire chains.

If the road and weather conditions require the use of tire chains, be sure to use tire chains that have been properly selected for the size of tire on your HYUNDAI vehicle.

Be sure to follow the guidelines and installation instructions provided from the tire chain manufacturer.

Damage to your vehicle caused by improper tire chain use is not covered by your vehicle manufacturer's warranty.

⚠ WARNING

The use of tire chains may adversely affect vehicle handling:

- **Drive less than 20 mph (30 km/h) or the chain manufacturer's recommended speed limit, whichever is lower.**
- **Drive carefully and avoid bumps, holes, sharp turns, and other road hazards, which may cause the vehicle to bounce.**
- **Avoid sharp turns or locked wheel braking.**

Information

- **Install tire chains on both left and right front tires. It should be noted that installing tire chains on the tires will provide a greater driving force, but will not prevent side skids.**
- **Do not install studded tires without first checking local, state and municipal regulations for possible restrictions against their use.**

Chain installation

When installing tire chains, follow the manufacturer's instructions and mount them as tightly possible. Drive slowly (less than 20 mph (30 km/h)) with chains installed. If you hear the chains contacting the body or chassis, stop and tighten them. If they still make contact, slow down until the noise stops. Remove the tire chains as soon as you begin driving on cleared roads.

When mounting snow chains, park the vehicle on level ground away from traffic. Turn on the vehicle Hazard Warning Flasher and place a triangular emergency warning device behind the vehicle (if available). Always place the vehicle in P (Park), apply the parking brake and turn off the engine before installing snow chains.

NOTICE

- When using tire chains:

- **Wrong size chains or improperly installed chains can damage your vehicle's brake lines, suspension, body and wheels.**
- **Use SAE "S" class or wire chains.**
- **If you hear noise caused by chains contacting the body, retighten the chain to prevent contact with the vehicle body.**
- **To prevent body damage, retighten the chains after driving 0.3~0.6 miles (0.5~1.0 km).**
- **Do not use tire chains on vehicles equipped with aluminum wheels. If unavoidable, use a wire type chain.**
- **Use wire chains less than 0.47 inch (12 mm) wide to prevent damage to the chain's connection.**

Winter Precautions

Use high quality ethylene glycol coolant

Your vehicle is delivered with high quality ethylene glycol coolant in the cooling system. It is the only type of coolant that should be used because it helps prevent corrosion in the cooling system, lubricates the water pump and prevents freezing. Be sure to replace or replenish your coolant in accordance with the maintenance schedule in chapter 7. Before winter, have your coolant tested to assure that its freezing point is sufficient for the temperatures anticipated during the winter.

Change to "winter weight" oil if necessary

In some climates it is recommended that a lower viscosity "winter weight" oil be used during cold weather. See chapter 8 for recommendations. If you aren't sure what weight oil you should use, consult an authorized HYUNDAI dealer.

Check battery and cables

Winter puts additional burdens on the battery system. Visually inspect the battery and cables as described in chapter 7. The level of charge in your battery can be checked by an authorized HYUNDAI dealer or a service station.

Check spark plugs and ignition system

Inspect your spark plugs as described in chapter 7 and replace them if necessary. Also check all ignition wiring and components to be sure they are not cracked, worn or damaged in any way.

Use approved window washer anti-freeze in system

To keep the water in the window washer system from freezing, add an approved window washer anti-freeze solution in accordance with instructions on the container. Window washer anti-freeze is available from an authorized HYUNDAI dealer and most auto parts outlets. Do not use engine coolant or other types of anti-freeze as these may damage the paint finish.

Do not let your parking brake freeze

Under some conditions your parking brake can freeze in the engaged position. This is most likely to happen when there is an accumulation of snow or ice around or near the rear brakes or if the brakes are wet. If there is a risk the parking brake may freeze, apply it only temporarily while you put the gear selector lever in P and block the rear wheels so the car cannot roll. Then release the parking brake.

Do not let ice and snow accumulate underneath

Under some conditions, snow and ice can build up under the fenders and interfere with the steering. When driving in severe winter conditions where this may happen, you should periodically check underneath the car to be sure the movement of the front wheels and the steering components is not obstructed.

Don't place foreign objects or materials in the engine compartment

Placement of foreign object or materials which prevent cooling of the engine, in the engine compartment, may cause a failure or combustion. The manufacturer is not responsible for the damage caused by such placement.

To keep locks from freezing

To keep the locks from freezing, squirt an approved de-icer fluid or glycerine into the key opening. If a lock is covered with ice, squirt it with an approved de-icing fluid to remove the ice. If the lock is frozen internally, you may be able to thaw it out by using a heated key. Handle the heated key with care to avoid injury.

VEHICLE LOAD LIMIT

Two labels on your driver's door sill show how much weight your vehicle was designed to carry: the Tire and Loading Information Label and the Certification Label.

Before loading your vehicle, familiarize yourself with the following terms for determining your vehicle's weight ratings, from the vehicle's specifications and the Certification Label:

Base Curb Weight

This is the weight of the vehicle including a full tank of fuel and all standard equipment. It does not include passengers, cargo, or optional equipment.

Vehicle Curb Weight

This is the weight of your new vehicle when you picked it up from your dealer plus any aftermarket equipment.

Cargo Weight

This figure includes all weight added to the Base Curb Weight, including cargo and optional equipment.

GAW (Gross Axle Weight)

This is the total weight placed on each axle (front and rear) - including vehicle curb weight and all payload.

GAWR (Gross Axle Weight Rating)

This is the maximum allowable weight that can be carried by a single axle (front or rear). These numbers are shown on the Certification Label. The total load on each axle must never exceed its GAWR.

GVW (Gross Vehicle Weight)

This is the Base Curb Weight plus actual Cargo Weight plus passengers.

GVWR (Gross Vehicle Weight Rating)

This is the maximum allowable weight of the fully loaded vehicle (including all options, equipment, passengers and cargo). The GVWR is shown on the Certification Label located on the driver's door sill.

Tire Loading Information Label

■ Type A

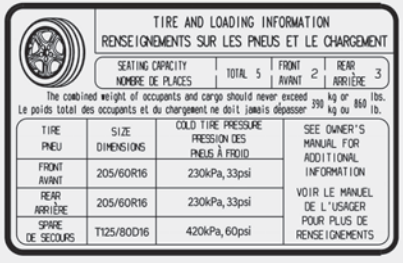

OOS067044N

■ Type C

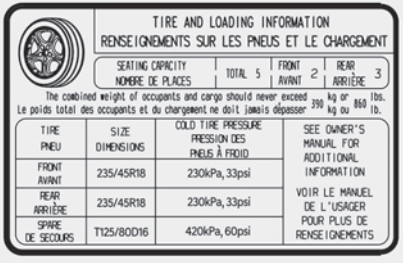

OOS067046N

■ Type B

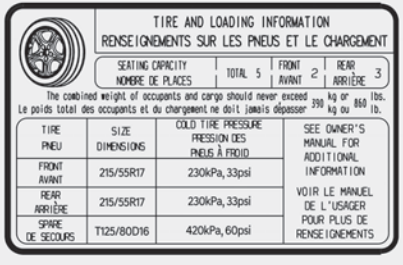

OOS067045N

The label located on the driver's door sill gives the original tire size, cold tire pressures recommended for your vehicle, the number of people that can be in your vehicle and vehicle capacity weight.

Vehicle capacity weight

860 lbs. (390 kg)

Vehicle capacity weight is the maximum combined weight of occupants and cargo. If your vehicle is equipped with a trailer, the combined weight includes the tongue load.

Seating capacity

Total : 5 persons
(Front seat : 2 persons,
Rear seat : 3 persons)

Seating capacity is the maximum number of occupants including a driver, your vehicle may carry. However, the seating capacity may be reduced based upon the weight of all of the occupants, and the weight of the cargo being carried or towed. Do not overload the vehicle as there is a limit to the total weight, or load limit including occupants and cargo, the vehicle can carry.

Towing capacity

We do not recommend using this vehicle for trailer towing.

Cargo capacity

The cargo capacity of your vehicle will increase or decrease depending on the weight and the number of occupants and the tongue load, if your vehicle is equipped with a trailer.

Steps for determining correct load limit

1. Locate the statement "The combined weight of occupants and cargo should never exceed XXX kg or XXX lbs." on your vehicle's placard.
2. Determine the combined weight of the driver and passengers that will be riding in your vehicle.
3. Subtract the combined weight of the driver and passengers from XXX kg or XXX lbs.
4. The resulting figure equals the available amount of cargo and luggage load capacity. For example, if the "XXX" amount equals 1400 lbs. and there will be five 150 lb. passengers in your vehicle, the amount of available cargo and luggage load capacity is 650 lbs. (1400 - 750 (5 x 150) = 650 lbs.)
5. Determine the combined weight of luggage and cargo being loaded on the vehicle. That weight may not safely exceed the available cargo and luggage load capacity calculated in Step 4.
6. If your vehicle will be towing a trailer, load from your trailer will be transferred to your vehicle. Consult this manual to determine how this reduces the available cargo and luggage load capacity of your vehicle.

⚠ WARNING

Do not overload the vehicle as there is a limit to the total weight, or load limit, including occupants and cargo, the vehicle can carry. Overloading can shorten the life of the vehicle. If the GVWR or the GAWR is exceeded, parts on the vehicle can break, and it can change the handling of your vehicle. These could cause you to lose control and result in an accident.

Example 1	Vehicle Capacity	≥		+	
	Maximum Load (1400 lbs.) (635 kg)		Passenger Weight (150 lbs. × 2 = 300 lbs.) (68 kg × 2 = 136 kg)		Cargo Weight (1100 lbs.) (499 kg)
Example 2	Vehicle Capacity	≥		+	
	Maximum Load (1400 lbs.) (635 kg)		Passenger Weight (150 lbs. × 5 = 750 lbs.) (68 kg × 5 = 340 kg)		Cargo Weight (650 lbs.) (295 kg)
Example 3	Vehicle Capacity	≥		+	
	Maximum Load (1400 lbs.) (635 kg)		Passenger Weight (172 lbs. × 5 = 860 lbs.) (78 kg × 5 = 390 kg)		Cargo Weight (540 lbs.) (245 kg)

Certification label

OBH059070

The certification label is located on the driver's door sill at the center pillar and shows the maximum allowable weight of the fully loaded vehicle. This is called the GVWR (Gross Vehicle Weight Rating). The GVWR includes the weight of the vehicle, all occupants, fuel and cargo.

This label also tells you the maximum weight that can be supported by the front and rear axles, called Gross Axle Weight Rating (GAWR).

The total weight of the vehicle, including all occupants, accessories, cargo, and trailer tongue load must not exceed the Gross Vehicle Weight Rating (GVWR) or the Gross Axle Weight Rating (GAWR). To find out the actual loads on your front and rear axles, you need to go to a weigh station and weigh your vehicle. Be sure to spread out your load equally on both sides of the centerline.

⚠ WARNING

Overloading

- **Never exceed the GVWR for your vehicle, the GAWR for either the front or rear axle and vehicle capacity weight. Exceeding these ratings can affect your vehicle's handling and braking ability, and cause an accident.**
- **Do not overload your vehicle. Overloading your vehicle can cause heat buildup in your vehicle's tires and possible tire failure, increased stopping distances and poor vehicle handling-all of which may result in a crash.**

NOTICE

Overloading your vehicle may cause damage. Repairs would not be covered by your warranty. Do not overload your vehicle.

⚠ WARNING

If you carry items inside your vehicle (e.g., suitcases, tools, packages, or anything else), they are moving as fast as the vehicle. If you have to stop or turn quickly, or if there is a crash, the items will keep going and can cause an injury if they strike the driver or a passenger.

- **Put items in the cargo area of your vehicle. Try to spread the weight evenly.**
- **Do not stack items, like suitcases, inside the vehicle above the tops of the seats.**
- **Do not leave an unsecured child restraint in your vehicle.**
- **When you carry something inside the vehicle, secure it.**

TRAILER TOWING

We do not recommend using this vehicle for trailer towing.

What to do in an emergency

Hazard warning flasher 6-2
In case of an emergency while driving 6-2
If the Engine Stalls While Driving 6-2
If the Engine Stalls at a Crossroad or Crossing 6-2
If you Have a Flat Tire While Driving 6-3
If the engine will not start 6-3
If the Engine Doesn't Turn Over or Turns Over Slowly 6-3
If the Engine Turns Over Normally but Doesn't Start 6-3
Jump starting 6-4
If the engine overheats 6-6
Tire Pressure Monitoring System (TPMS).....6-8
Check Tire Pressure 6-8
Tire Pressure Monitoring System 6-9
Low Tire Pressure Telltale 6-10
Low Tire Pressure LCD Display with Position Indicator 6-10
TPMS Malfunction Indicator 6-11
Changing a Tire with TPMS.....6-12
If you have a flat tire.....6-14
Jack and Tools 6-14
Changing Tires 6-15
Towing 6-20
Towing Service.....6-20
Removable Towing Hook 6-21
Emergency Towing.....6-22
Tie-down Hook.....6-23

HAZARD WARNING FLASHER

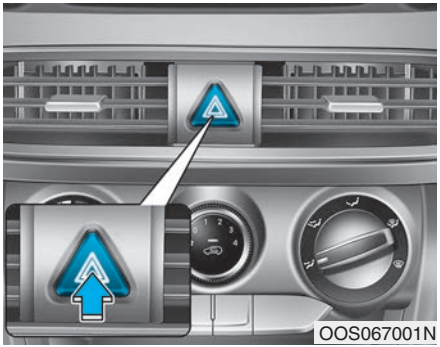

The hazard warning flasher serves as a warning to other drivers to exercise extreme caution when approaching, overtaking, or passing your vehicle.

It should be used whenever emergency repairs are being made or when the vehicle is stopped near the edge of a roadway.

To turn the hazard warning flasher on or off, press the hazard warning flasher button. The button is located in the center fascia panel. Both the left and right turn signal lights will flash simultaneously.

- The hazard warning flasher operates whether your vehicle is running or not.
- The turn signals do not work when the hazard flasher is on.

IN CASE OF AN EMERGENCY WHILE DRIVING

If the Engine Stalls While Driving

- Reduce your speed gradually, keeping a straight line. Move cautiously off the road to a safe place.
- Turn on your hazard warning flasher.
- Try to start the engine again. If your vehicle will not start, contact an authorized HYUNDAI dealer or seek other qualified assistance.

If the Engine Stalls at a Crossroad or Crossing

If the engine stalls at a crossroads or crossing, if safe to do so, move the shift lever to the N (Neutral) position and then push the vehicle to a safe location.

If you Have a Flat Tire While Driving

If a tire goes flat while you are driving:

- Take your foot off the accelerator pedal and let the vehicle slow down while driving straight ahead. Do not apply the brakes immediately or attempt to pull off the road as this may cause loss of vehicle control resulting in an accident. When the vehicle has slowed to such a speed that it is safe to do so, brake carefully and pull off the road. Drive off the road as far as possible and park on firm, level ground. If you are on a divided highway, do not park in the median area between the two traffic lanes.
- When the vehicle is stopped, press the hazard warning flasher button, move the shift lever into P (Park), and apply the parking brake, and place the ignition switch in the LOCK/OFF position.
- Have all passengers get out of the vehicle. Be sure they all get out on the side of the vehicle that is away from traffic.
- When changing a flat tire, follow the instructions provided later in this chapter.

IF THE ENGINE WILL NOT START

If the Engine Doesn't Turn Over or Turns Over Slowly

- Be sure the shift lever is in N (Neutral) or P (Park). The engine starts only when the shift lever is in N (Neutral) or P (Park).
- Check the battery connections to be sure they are clean and tight.
- Turn on the interior light. If the light dims or goes out when you operate the starter, the battery is drained.

Do not push or pull the vehicle to start it. This could cause damage to your vehicle. See instructions for "Jump Starting" provided in this chapter.

⚠ CAUTION

Push or pull starting the vehicle may cause the catalytic converter to overload which can lead to damage to the emission control system.

If the Engine Turns Over Normally but Doesn't Start

Check the fuel level and add fuel if necessary.

If the engine still does not start, have your vehicle checked by an authorized HYUNDAI dealer.

JUMP STARTING

Jump starting can be dangerous if done incorrectly. Follow the jump starting procedure in this section to avoid serious injury or damage to your vehicle. If in doubt about how to properly jump start your vehicle, we strongly recommend that you have a service technician or towing service do it for you.

⚠ WARNING

To prevent SERIOUS INJURY or DEATH to you or bystanders, always follow these precautions when working near or handling the battery:

Always read and follow instructions carefully when handling a battery.

Wear eye protection designed to protect the eyes from acid splashes.

Keep all flames, sparks, or smoking materials away from the battery.

Hydrogen is always present in battery cells, is highly combustible, and may explode if ignited.

Keep batteries out of reach of children.

Batteries contain sulfuric acid which is highly corrosive. Do not allow acid to contact your eyes, skin or clothing.

If acid gets into your eyes, flush your eyes with clean water for at least 15 minutes and get immediate medical attention. If acid gets on your skin, thoroughly wash the area. If you feel pain or a burning sensation, get medical attention immediately.

- **When lifting a plastic-cased battery, excessive pressure on the case may cause battery acid to leak. Lift with a battery carrier or with your hands on opposite corners.**
- **Do not attempt to jump start your vehicle if your battery is frozen.**
- **NEVER attempt to recharge the battery when the vehicle's battery cables are connected to the battery.**

- **The electrical ignition system works with high voltage. NEVER touch these components with the engine running or when the ignition switch is in the ON position.**

Information

An inappropriately disposed battery can be harmful to the environment and human health. Dispose of the battery according to your local law(s) or regulations.

NOTICE

To prevent damage to your vehicle:

- **Only use a 12-volt power supply (battery or jumper system) to jump start your vehicle.**
- **Do not attempt to jump start your vehicle by push-starting.**

Jump starting procedure

1. Position the vehicles close enough that the jumper cables will reach, but do not allow the vehicles to touch.
2. Avoid fans or any moving parts in the engine compartment at all times, even when the vehicles are turned off.
3. Turn off all electrical devices such as radios, lights, air conditioning, etc. Put the vehicles in P (Park) and set the parking brakes. Turn both vehicles OFF.

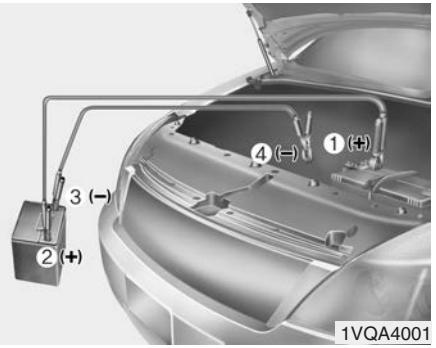

4. Connect the jumper cables in the exact sequence shown in the illustration. First connect one jumper cable to the red, positive (+) jumper terminal of your vehicle (1).
5. Connect the other end of the jumper cable to the red, positive (+) battery/jumper terminal of the assisting vehicle (2).
6. Connect the second jumper cable to the black, negative (-) battery/chassis ground of the assisting vehicle (3).

7. Connect the other end of the second jumper cable to the black, negative (-) chassis ground of your vehicle (4).

   Do not allow the jumper cables to contact anything except the correct battery or jumper terminals or the correct ground. Do not lean over the battery when making connections.

8. Start the engine of the assisting vehicle and let it run at approximately 2,000 rpm for a few minutes. Then start your vehicle.

If your vehicle will not start after a few attempts, it probably requires servicing. In this event please seek qualified assistance. If the cause of your battery discharging is not apparent, have your vehicle checked by an authorized HYUNDAI dealer.

Disconnect the jumper cables in the exact reverse order you connected them:

1. Disconnect the jumper cable from the black, negative (-) chassis ground of your vehicle (4).
2. Disconnect the other end of the jumper cable from the black, negative (-) battery/chassis ground of the assisting vehicle (3).
3. Disconnect the second jumper cable from the red, positive (+) battery/jumper terminal of the assisting vehicle (2).
4. Disconnect the other end of the jumper cable from the red, positive (+) jumper terminal of your vehicle (1).

IF THE ENGINE OVERHEATS

If your temperature gage indicates overheating, you experience a loss of power, or hear loud pinging or knocking, the engine may be overheating. If this happens, you should:

1. Pull off the road and stop as soon as it is safe to do so.
2. Place the shift lever in P (Park) and set the parking brake. If the air conditioning is ON, turn it OFF.
3. If engine coolant is running out under the vehicle or steam is coming out from the hood, stop the engine. Do not open the hood until the coolant has stopped running or the steaming has stopped. If there is no visible loss of engine coolant and no steam, leave the engine running and check to be sure the engine cooling fan is operating. If the fan is not running, turn the engine off.

⚠ WARNING

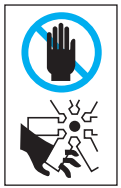

While the engine is running, keep hands, clothing and tools away from the moving parts such as the cooling fan and drive belt to prevent serious injury.

4. Check for coolant leaking from the radiator, hoses or under the vehicle. (If the air conditioning had been in use, it is normal for cold water to be draining from it when you stop.)
5. If engine coolant is leaking out, stop the engine immediately and call the nearest authorized HYUNDAI dealer for assistance.

⚠ WARNING

Your vehicle is equipped with a pressurized coolant reserve tank. NEVER remove the engine coolant reservoir tank/radiator cap or the drain plug while the engine and radiator are HOT. Hot coolant and steam may blow out under pressure, causing serious injury.

Turn the engine off and wait until the engine cools down. Use extreme care when removing the engine coolant reservoir tank/radiator cap. Wrap a towel or thick rag around it, and turn it counterclockwise slowly to release some of the pressure from the system. Step back while the pressure is released.

When you are sure all the pressure has been released, continue turning the cap counterclockwise to remove it.

6. If you cannot find the cause of the overheating, wait until the engine temperature has returned to normal. Then, if coolant has been lost, carefully add coolant to the reservoir to bring the fluid level in the reservoir up to the halfway mark.
7. Proceed with caution, keeping alert for further signs of overheating. If overheating happens again, call an authorized HYUNDAI dealer for assistance.

⚠ CAUTION

Serious loss of coolant indicates a leak in the cooling system and should be checked as soon as possible by an authorized HYUNDAI dealer.

TIRE PRESSURE MONITORING SYSTEM (TPMS)

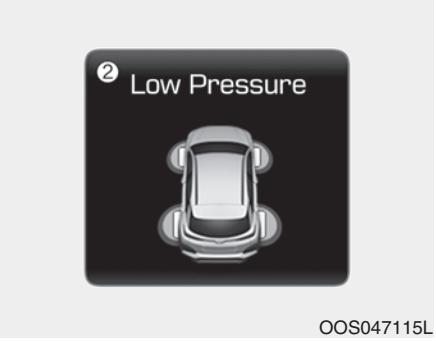

(1) Low Tire Pressure / TPMS Malfunction Indicator Lamp

(2) Low Tire Pressure / Tire Pressure Monitor / TPMS Malfunction Display (shown on the cluster LCD display)

Check Tire Pressure

- You can check the tire pressure in the Assist mode on the cluster.

  Refer to the "LCD Display Mode" section in chapter 3.
- A "Drive to display" message will appear for the first few minutes of driving after initial engine start up.

  If the tire pressure is not displayed after a few minutes of driving, check the tire pressures.
- The displayed tire pressure values may differ from those measured with a tire pressure gage.
- You can change the tire pressure unit in the User Settings mode on the cluster.

  - psi, kpa, bar **(Refer to the "User Settings Mode" section in chapter 3)**.

Tire Pressure Monitoring System

⚠ WARNING

Over-inflation or under-inflation can reduce tire life, adversely affect vehicle handling, and lead to sudden tire failure that may cause loss of vehicle control resulting in an accident.

Each tire, including the spare (if provided), should be checked monthly when cold and inflated to the inflation pressure recommended by the vehicle manufacturer on the vehicle placard or tire inflation pressure label. A cold tire means the vehicle has been sitting for 3 hours and driven for less than 1 mile (1.6 km) in that 3 hour period.

Allow the tire to cool before measuring the inflation pressure. Always be sure the tire is cold before inflating to the recommended pressure. If your vehicle has tires of a different size than the size indicated on the vehicle placard or tire inflation pressure label, you should determine the proper tire inflation pressure for those tires.

As an added safety feature, your vehicle has been equipped with a tire pressure monitoring system (TPMS) that illuminates a low tire pressure telltale when one or more of your tires is significantly under-inflated. Accordingly, when the low tire pressure telltale illuminates, you should stop and check your tires as soon as possible, and inflate them to the proper pressure. Driving on a significantly under-inflated tire causes the tire to overheat and can lead to tire failure.

Under-inflation also reduces fuel efficiency and tire tread life, and may affect the vehicle's handling and stopping ability.

Please note that the TPMS is not a substitute for proper tire maintenance, and it is the driver's responsibility to maintain correct tire pressure, even if under-inflation has not reached the level to trigger illumination of the TPMS low tire pressure telltale.

Your vehicle has also been equipped with a TPMS malfunction indicator to indicate when the system is not operating properly. The TPMS malfunction indicator is combined with the low tire pressure telltale. When the system detects a malfunction, the telltale will flash for approximately one minute and then remain continuously illuminated. This sequence will continue upon subsequent vehicle start-ups as long as the malfunction exists.

When the malfunction indicator is illuminated, the system may not be able to detect or signal low tire pressure as intended. TPMS malfunctions may occur for a variety of reasons, including the installation of replacement or alternate tires or wheels on the vehicle that prevent the TPMS from functioning properly.

Always check the TPMS malfunction telltale after replacing one or more tires or wheels on your vehicle to ensure that the replacement or alternate tires and wheels allow the TPMS to continue to function properly.

NOTICE

If any of the below happens, have the system checked by an authorized HYUNDAI dealer.

1. **The Low Tire Pressure TPMS Malfunction Indicator does not illuminate for 3 seconds when the ignition switch is placed to the ON position or engine is running.**
2. **The TPMS Malfunction Indicator remains illuminated after blinking for approximately 1 minute.**
3. **The Low Tire Pressure LCD display remains illuminated**

Low Tire Pressure Telltale

OOS047115L

Low Tire Pressure LCD Display with Position Indicator

When the tire pressure monitoring system warning indicators are illuminated and the warning message is displayed on the cluster LCD display, one or more of your tires is significantly under-inflated. The LCD position indicator will indicate which tire is significantly under-inflated by illuminating the corresponding position light.

If any of your tire pressures are indicated as being low, immediately reduce your speed, avoid hard cornering, and anticipate increased stopping distances. You should stop and check your tires as soon as possible. Inflate the tires to the proper pressure as indicated on the vehicle's placard or tire inflation pressure label located on the driver's side center pillar outer panel.

If you cannot reach a service station or if the tire cannot hold the newly added air, replace the low pressure tire with the spare tire.

The Low Tire Pressure LCD position indicator will remain on and the TPMS Malfunction Indicator may blink for one minute and then remain illuminated until you have the low pressure tire repaired and replaced on the vehicle.

NOTICE

The spare tire is not equipped with a tire pressure sensor.

⚠ CAUTION

In winter or cold weather, the Low Tire Pressure Telltale may be illuminated if the tire pressure was adjusted to the recommended tire inflation pressure in warm weather. It does not mean your TPMS is malfunctioning because the decreased temperature leads to a proportional lowering of tire pressure.

When you drive your vehicle from a warm area to a cold area or from a cold area to a warm area, or the outside temperature is greatly higher or lower, you should check the tire inflation pressure and adjust the tires to the recommended tire inflation pressure.

⚠ WARNING

Low pressure damage

Significantly low tire pressure makes the vehicle unstable and can contribute to loss of vehicle control and increased braking distances.

Continued driving on low pressure tires can cause the tires to overheat and fail.

TPMS Malfunction Indicator

The TPMS Malfunction Indicator will illuminate after it blinks for approximately one minute when there is a problem with the Tire Pressure Monitoring System.

Have the system checked by an authorized HYUNDAI dealer as soon as possible.

NOTICE

If there is a malfunction with the TPMS, the individual tire pressures in the cluster LCD display will not be available. Have the system checked by an authorized HYUNDAI dealer as soon as possible.

NOTICE

The TPMS Malfunction Indicator may illuminate after blinking for one minute if the vehicle is near electric power supply cables or radio transmitters such as police stations, government and public offices, broadcasting stations, military installations, airports, transmitting towers, etc.

Additionally, the TPMS Malfunction Indicator may illuminate if snow chains are used or electronic devices such as computers, chargers, remote starters, navigation, etc. This may interfere with normal operation of the TPMS.

Changing a Tire with TPMS

If you have a flat tire, the Low Tire Pressure and LCD position indicator will come on. Have the flat tire repaired by an authorized HYUNDAI dealer as soon as possible or replace the flat tire with the spare tire.

⚠ CAUTION

Never use a puncture-repairing agent not approved by HYUNDAI dealer to repair and/or inflate a low pressure tire. Tire sealant not approved by HYUNDAI dealer may damage the tire pressure sensor.

The spare tire does not come with a tire pressure monitoring sensor. When the low pressure tire or the flat tire is replaced with the spare tire, the Low Tire Pressure LCD position indicator will remain on. Also, the TPMS Malfunction Indicator will illuminate after blinking for one minute if the vehicle is driven at speed above 15.5 mph (25 km/h) for approximately 20 minutes.

Once the original tire equipped with a tire pressure monitoring sensor is reinflated to the recommended pressure and reinstalled on the vehicle, the Low Tire Pressure LCD position indicator and TPMS Malfunction Indicator will go off within a few minutes of driving.

If the indicators do not disappear after a few minutes, please visit an authorized HYUNDAI dealer.

Each wheel is equipped with a tire pressure sensor mounted inside the tire behind the valve stem (except for the spare tire). You must use TPMS specific wheels. It is recommended that you always have your tires serviced by an authorized HYUNDAI dealer.

You may not be able identify a tire with low pressure by simply looking at it. Always use a good quality tire pressure gage to measure the tire's inflation pressure. Please note that a tire that is hot (from being driven) will have a higher pressure measurement than a tire that is cold.

A cold tire means the vehicle has been sitting for 3 hours and driven for less than 1 mile (1.6 km) in that 3 hour period.

Allow the tire to cool before measuring the inflation pressure. Always be sure the tire is cold before inflating to the recommended pressure.

⚠ WARNING

- **The TPMS cannot alert you to severe and sudden tire damage caused by external factors such as nails or road debris.**
- **If you feel any vehicle instability, immediately take your foot off the accelerator, apply the brakes gradually with light force, and slowly move to a safe position off the road.**

⚠ WARNING

Tampering with, modifying, or disabling the Tire Pressure Monitoring System (TPMS) components may interfere with the system's ability to warn the driver of low tire pressure conditions and/or TPMS malfunctions. Tampering with, modifying, or disabling the Tire Pressure Monitoring System (TPMS) components may void the warranty for that portion of the vehicle.

i Information

This device complies with Part 15 of the FCC rules.

Operation is subject to the following three conditions:

1. **This device may not cause harmful interference.**
2. **This device must accept any interference received, including interference that may cause undesired operation.**
3. **Changes or modifications not expressly approved by the party responsible for compliance could void the user's authority to operate the equipment.**

IF YOU HAVE A FLAT TIRE

⚠ WARNING

Changing a tire can be dangerous. Follow the instructions in this section when changing a tire to reduce the risk of serious injury or death.

⚠ CAUTION

Be careful as you use the jack handle to stay clear of the flat end. The flat end has sharp edges that could cause cuts.

Jack and Tools

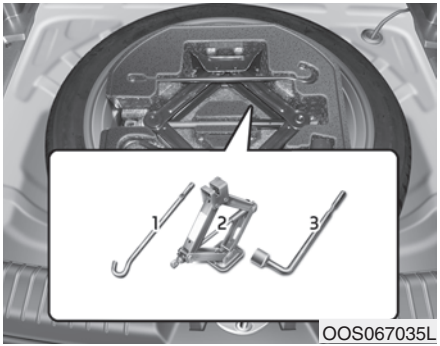

① Jack handle
② Jack
③ Wheel lug nut wrench

The jack, jack handle, and wheel lug nut wrench are stored in the luggage compartment under the luggage box cover.

The jack is provided for emergency tire changing only.

Turn the winged hold down bolt counterclockwise to remove the spare tire.

Store the spare tire in the same compartment by turning the winged hold down bolt clockwise.

To prevent the spare tire and tools from "rattling", store them in their proper location.

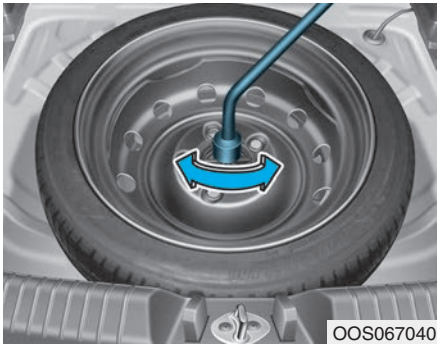

If it is hard to loosen the tire hold-down wing bolt by hand, you can loosen it easily using the wheel nut wrench.

Turn the tire hold-down wing bolt counterclockwise with the wheel nut wrench.

Changing Tires

⚠ WARNING

A vehicle can slip or roll off of a jack causing serious injury or death to you or those nearby. Take the following safety precautions:

- **Never place any portion of your body under a vehicle that is supported by a jack.**
- **NEVER attempt to change a tire in the lane of traffic. ALWAYS move the vehicle completely off the road on level, firm ground away from traffic before trying to change a tire. If you cannot find a level, firm place off the road, call a towing service for assistance.**
- **Be sure to use the jack provided with the vehicle.**
- **ALWAYS place the jack on the designated jacking positions on the vehicle and NEVER on the bumpers or any other part of the vehicle for jacking support.**
- **Do not start or run the engine while the vehicle is on the jack.**
- **Do not allow anyone to remain in the vehicle while it is on the jack.**
- **Keep children away from the road and the vehicle.**

Follow these steps to change your vehicle's tire:

1. Park on a level, firm surface.
2. Move the shift lever into P (Park) or into R (Reverse) if equipped with a manual transmission, apply the parking brake, and place the ignition switch in the LOCK/OFF position.
3. Press the hazard warning flasher button.
4. Remove the wheel lug nut wrench, jack, jack handle, and spare tire from the vehicle.
5. Block both the front and rear of the tire diagonally opposite of the tire you are changing.

OOS067017

6. Loosen the wheel lug nuts counterclockwise one turn each in the order shown above, but do not remove any lug nuts until the tire has been raised off of the ground.

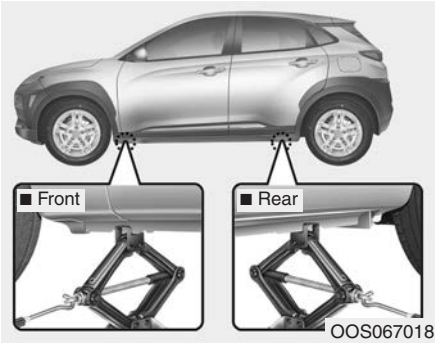

OOS067018

7. Place the jack at the designated jacking position under the frame closest to the tire you are changing. The jacking positions are plates welded to the frame with two notches. Never jack at any other position or part of the vehicle. Doing so may damage the side seal molding or other parts of the vehicle.

OOS067020

8. Insert the jack handle into the jack and turn it clockwise, raising the vehicle until the tire clears the ground. Make sure the vehicle is stable on the jack.

9. Loosen the lug nuts with the wheel lug nut wrench and remove them with your fingers. Remove the wheel from the studs and lay it flat on the ground out of the way. Remove any dirt or debris from the studs, mounting surfaces, and wheel.
10. Install the spare tire onto the studs of the hub.
11. Tighten the lug nuts with your fingers onto the studs with the smaller end of the lug nuts closest to the wheel.
12. Lower the vehicle to the ground by turning the jack handle counterclockwise.
13. Use the wheel lug nut wrench to tighten the lug nuts in the order shown. Double-check each lug nut until they are tight. After changing tires, have an authorized HYUNDAI dealer tighten the lug nuts to their proper torque as soon as possible. **The wheel lug nut should be tightened to 79~94 lbf·ft (11~13 kgf·m).**

OOS067019L

If you have a tire gage, check the tire pressure (see "Tires and Wheels" in chapter 8 for tire pressure instructions.). If the pressure is lower or higher than recommended, drive slowly to the nearest service station and adjust it to the recommended pressure. Always reinstall the valve cap after checking or adjusting tire pressure. If the cap is not replaced, air may leak from the tire. If you lose a valve cap, buy another and install it as soon as possible. After changing tires, secure the flat tire and return the jack and tools to their proper storage locations. If it is hard to secure the flat tire, put the flat tire in the luggage compartment.

NOTICE

- **Check the tire pressure as soon as possible after installing a spare tire. Adjust it to the recommended pressure.**
- **Check and tighten the wheel lug nuts after driving over 30 mile (50 km) if tires are replaced. Recheck the tire wheel lug nuts after driving over 620 mile (1,000 km).**

⚠ CAUTION

Your vehicle has metric threads on the studs and lug nuts. Make certain during tire changing that the same nuts that were removed are reinstalled. If you have to replace your lug nuts make sure they have metric threads to avoid damaging the studs and ensure the wheel is properly secured to the hub. Consult an authorized HYUNDAI dealer for assistance.

If any of the equipment such as the jack, lug nuts, studs, or other equipment is damaged or in poor condition, do not attempt to change the tire and call for assistance.

Use of compact spare tires

Compact spare tires are designed for emergency use only. Drive carefully on the compact spare tire and always follow the safety precautions.

⚠ WARNING

To prevent compact spare tire failure and loss of control possibly resulting in an accident:

- **Use the compact spare tire only in an emergency.**
- **NEVER operate your vehicle over 50 mph (80 km/h).**
- **Do not exceed the vehicle's maximum load rating or the load carrying capacity shown on the sidewall of the compact spare tire.**
- **Do not use the compact spare tire continuously. Repair or replace the original tire as soon as possible to avoid failure of the compact spare tire.**

When driving with the compact spare tire mounted to your vehicle:

- Check the tire pressure after installing the compact spare tire. The compact spare tire should be inflated to 60 psi (420 kPa).
- Do not take this vehicle through an automatic car wash while the compact spare tire is installed.
- Do not use the compact spare tire on any other vehicle because this tire has been designed especially for your vehicle.
- The compact spare tire's tread life is shorter than a regular tire. Inspect your compact spare tire regularly and replace worn compact spare tires with the same size and design, mounted on the same wheel.
- Do not use more than one compact spare tire at a time.

NOTICE

When the original tire and wheel are repaired and reinstalled on the vehicle, the lug nut torque must be set correctly. The correct lug nut tightening torque is 79~94 lbf·ft (11~13 kgf·m).

⚠ CAUTION

To prevent damaging the compact spare tire and your vehicle:

- **Drive slowly enough for the road conditions to avoid all hazards, such as a potholes or debris.**
- **Avoid driving over obstacles. The compact spare tire diameter is smaller than the diameter of a conventional tire and reduces the ground clearance approximately 1 inch (25 mm).**
- **Do not use tire chains on the compact spare tire. Because of the smaller size, a tire chain will not fit properly.**
- **Do not use the compact spare tire on any other wheels, nor should standard tires, snow tires, wheel covers or trim rings be used with the compact spare wheel.**

Jack label

■ Example

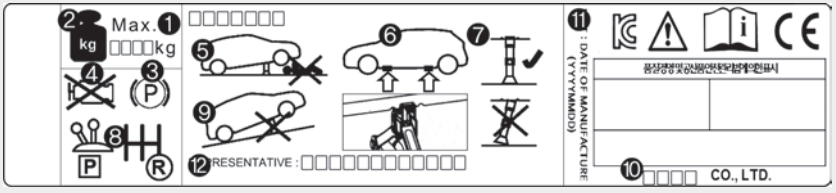

OOS067043

The actual Jack label in the vehicle may differ from the illustration.

For more detailed specifications, refer to the label attached to the jack.

1. Model Name
2. Maximum allowable load
3. When using the jack, set your parking brake.
4. When using the jack, stop the engine.
5. Do not get under a vehicle that is supported by a jack.
6. The designated locations under the frame
7. When supporting the vehicle, the base plate of jack must be vertical under the lifting point.
8. Shift into Reverse gear on vehicles with manual transmission or move the shift lever to the P (Park) position on vehicles with automatic transmission/dual clutch transmission.
9. The jack should be used on firm level ground.
10. Jack manufacture
11. Production date
12. Representative company and address

TOWING

Towing Service

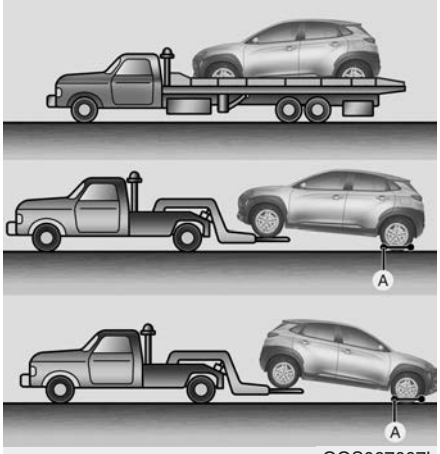

OOS067007L

[A] : Dollies

If emergency towing is necessary, we recommend having it done by an authorized HYUNDAI dealer or a commercial tow-truck service. Proper lifting and towing procedures are necessary to prevent damage to the vehicle. The use of wheel dollies or flatbed is recommended.

On 2WD vehicles, it is acceptable to tow the vehicle with the rear wheels on the ground (without dollies) and the front wheels off the ground. If any of the loaded wheels or suspension components are damaged or the vehicle is being towed with the front wheels on the ground, use a towing dolly under the front wheels.

When being towed by a commercial tow truck and wheel dollies are not used, the front of the vehicle should always be lifted, not the rear.

If your vehicle is an AWD vehicle, it must be towed with a wheel lift and dollies or flatbed equipment with all the wheels off the ground.

⚠ CAUTION

An AWD vehicle should never be towed with the wheels on the ground. This can cause serious damage to the transaxle or the AWD system.

⚠ CAUTION

- **Do not tow the vehicle with the front wheels on the ground as this may cause damage to the vehicle.**

OOS067022

- **Do not tow with sling-type equipment. Use a wheel lift or flatbed equipment.**

OOS067021

⚠ WARNING

If your vehicle is equipped with a rollover sensor, place the ignition switch in the LOCK/OFF or ACC position when the vehicle is being towed. The side impact and curtain air bag may deploy if the sensor detects the situation as a rollover.

When towing your vehicle in an emergency without wheel dollies:

1. Place the ignition switch in the ACC position.
2. Place the shift lever in N (Neutral).
3. Release the parking brake.

⚠ CAUTION

Failure to place the shift lever in N (Neutral) when being towed with the front wheels on the ground can cause internal damage to the transaxle.

Removable Towing Hook

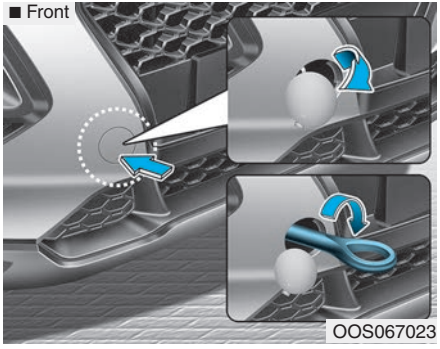

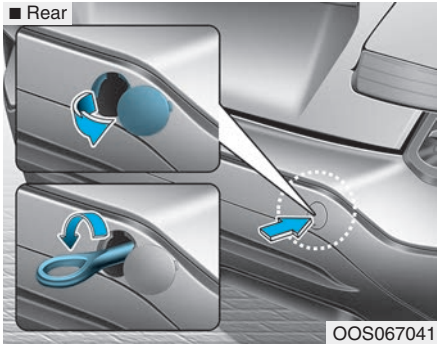

1. Open the liftgate, and remove the towing hook from the tool case.
2. Remove the hole cover pressing the lower part of the cover on the front or rear bumper.
3. Install the towing hook by turning it clockwise into the hole until it is fully secured.
4. Remove the towing hook and install the cover after use.

Emergency Towing

■ Front

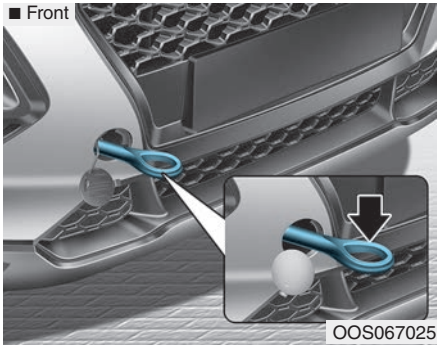

OOS067025

■ Rear

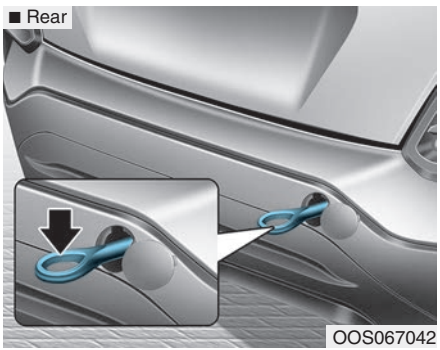

OOS067042

If towing is necessary, we recommend you have it done by an authorized HYUNDAI dealer or a commercial tow truck service.

If a towing service is not available in an emergency, your vehicle may be temporarily towed using a cable or chain secured to the emergency towing hook at the front (or rear) of the vehicle.

Use extreme caution when towing the vehicle with a cable or chain. A driver must be in the vehicle to steer it and operate the brakes.

Towing in this manner may be done only on hard-surfaced roads for a short distance and at low speeds. Also, the wheels, axles, power train, steering and brakes must all be in good condition.

Always follow these emergency towing precautions:

- Place the ignition switch in the ACC position so the steering wheel is not locked. (if equipped)
- Place the shift lever in N (Neutral).
- Release the parking brake.
- Depress the brake pedal with more force than normal since you will have reduced braking performance.
- More steering effort will be required because the power steering system will be disabled.
- Use a vehicle heavier than your own to tow your vehicle.
- The drivers of both vehicles should communicate with each other frequently.
- Before emergency towing, check that the hook is not broken or damaged.
- Fasten the towing cable or chain securely to the hook.
- Do not jerk the hook. Apply steady and even force.

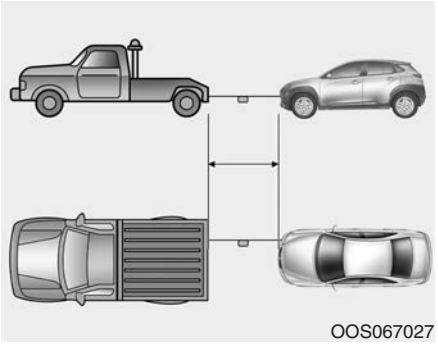
OOS067027

- Use a towing cable or chain less than 16 feet (5 m) long. Attach a white or red cloth (about 12 inch (30 cm) wide) in the middle of the cable or chain for easy visibility.
- Drive carefully so the towing cable or chain remains tight during towing.
- Before towing, check the automatic transaxle/dual clutch transmission for fluid leaks under your vehicle. If the automatic transaxle/dual clutch transmission fluid is leaking, flatbed equipment or a towing dolly must be used.

⚠ CAUTION

To avoid damage to your vehicle and vehicle components when towing:

- **Always pull straight ahead when using the towing hooks. Do not pull from the side or at a vertical angle.**
- **Do not use the towing hooks to pull a vehicle out of mud, sand or other conditions from which the vehicle cannot be driven out under its own power.**
- **Limit the vehicle speed to 10 mph (15 km/h) and drive less than 1 mile (1.5 km) when towing to avoid serious damage to the automatic transaxle/dual clutch transmission.**

Tie-down Hook

⚠ WARNING

Do not use the tie-down hook(s) for towing purposes. If the tie-down hook(s) are used for towing, the tie-down hook(s) or bumper will be damaged and this could lead to serious injury.

Maintenance

Engine compartment 7-3
Maintenance services 7-4
Owner's Responsibility.....7-4
Owner Maintenance Precautions.....7-4
Owner maintenance.....7-5
Owner Maintenance Schedule.....7-6
Scheduled maintenance services.....7-7
Normal Maintenance Schedule (Nu 2.0 MPI) 7-8
Maintenance Under Severe Usage Conditions (Nu 2.0 MPI).....7-11
Normal Maintenance Schedule (Gamma 1.6 T-GDI) 7-13
Maintenance Under Severe Usage Conditions (Gamma 1.6 T-GDI) 7-16
Explanation of scheduled maintenance items..7-18
Engine oil 7-21
Checking the Engine Oil Level 7-21
Checking the Engine Oil and Filter 7-22
Engine coolant.....7-23
Checking the Engine Coolant Level.....7-23
Changing Engine Coolant 7-26
Brake fluid 7-27
Checking the Brake Fluid Level.....7-27
Washer fluid 7-28
Checking the Washer Fluid Level.....7-28
Parking brake 7-28
Checking the Parking Brake.....7-28
Air cleaner 7-29
Filter Replacement.....7-29
Climate control air filter 7-30
Filter Inspection.....7-30
Wiper blades.....7-32
Blade Inspection 7-32
Blade Replacement 7-32
Battery.....7-35
For Best Battery Service 7-36
Battery Recharging 7-36
Reset Features.....7-37

Tires and wheels 7-38
Tire Care 7-38
Recommended Cold Tire Inflation Pressures 7-39
Check Tire Inflation Pressure 7-40
Tire Rotation 7-40
Wheel Alignment and Tire Balance 7-41
Tire Replacement 7-42
Wheel Replacement 7-43
Tire Traction 7-43
Tire Maintenance 7-43
Tire Sidewall Labeling 7-43
Tire Terminology and Definitions 7-47
All Season Tires 7-50
Summer Tires 7-50
Snow Tires 7-51
Radial-Ply Tires 7-51
Low Aspect Ratio Tires 7-51
Fuses 7-53
Instrument Panel Fuse Replacement 7-54
Engine Compartment Panel Fuse Replacement 7-55
Fuse/Relay Panel Description 7-57
Light bulbs 7-69
Headlamp, Parking Lamp, Daytime Running Light, Turn Signal Lamp and Side Marker, Cornering lamp 7-69
Front fog lamp 7-74
Side Repeater Lamp Replacement 7-74
Rear Combination Light Bulb Replacement 7-75
High Mounted Stop Lamp Replacement 7-77
License Plate Light Bulb Replacement 7-78
Interior Light Bulb Replacement 7-78
Appearance care 7-80
Exterior Care 7-80
Interior Care 7-84
Emission control system 7-87
Crankcase Emission Control System 7-87
Evaporative Emission Control System Including Onboard Refueling Vapor Recovery (ORVR) 7-87
Exhaust Emission Control System 7-88
California perchlorate notice 7-91

ENGINE COMPARTMENT

■ Gamma 1.6 T-GDI

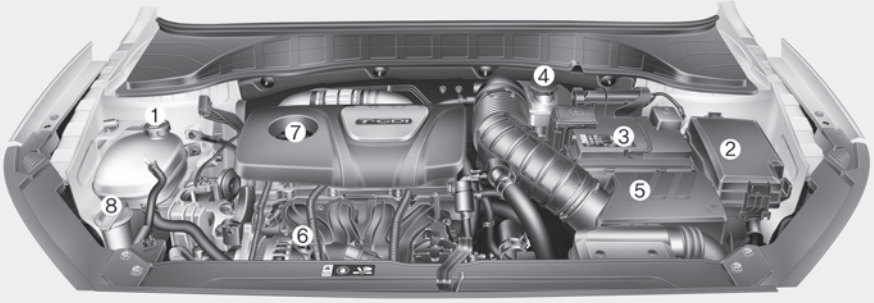

■ Nu 2.0 MPI

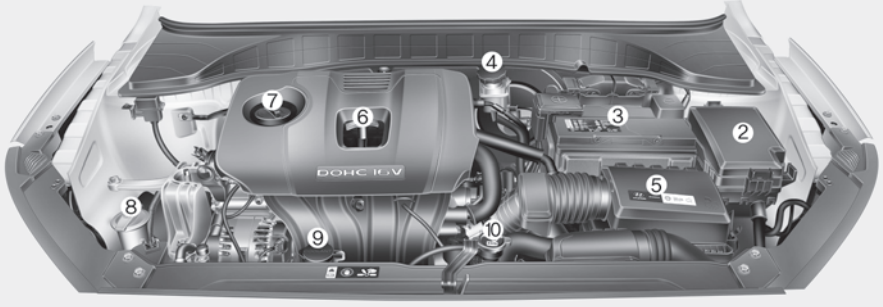

The actual engine compartment in the vehicle may differ from the illustration.

1. Engine coolant reservoir/
   Engine coolant cap
2. Fuse box
3. Battery
4. Brake fluid reservoir
5. Air cleaner
6. Engine oil dipstick
7. Engine oil filler cap
8. Windshield washer fluid reservoir
9. Engine coolant reservoir
10. Engine coolant cap

The actual engine compartment in the vehicle may differ from the illustration.

OOS077001/OOS077071N

MAINTENANCE SERVICES

You should exercise the utmost care to prevent damage to your vehicle and injury to yourself whenever performing any maintenance or inspection procedures.

We recommend you have your vehicle maintained and repaired by an authorized HYUNDAI dealer. An authorized HYUNDAI dealer meets HYUNDAI's high service quality standards and receives technical support from HYUNDAI in order to provide you with a high level of service satisfaction.

Owner's Responsibility

Maintenance service and record retention are the owner's responsibility.

You should retain documents that show proper maintenance has been performed on your vehicle in accordance with the scheduled maintenance service charts shown on the following pages. You need this information to establish your compliance with the servicing and maintenance requirements of your vehicle warranties.

Detailed warranty information is provided in your Owner's Handbook & Warranty Information booklet.

Repairs and adjustments required as a result of improper maintenance or a lack of required maintenance are not covered.

Owner Maintenance Precautions

Inadequate, incomplete or insufficient servicing may result in operational problems with your vehicle that could lead to vehicle damage, an accident, or personal injury. This chapter provides instructions only for the maintenance items that are easy to perform. Several procedures can be done only by an authorized HYUNDAI dealer with special tools.

Your vehicle should not be modified in any way. Such modifications may adversely affect the performance, safety or durability of your vehicle and may, in addition, violate conditions of the limited warranties covering the vehicle.

Certain modifications may also be in violation of regulations established by the U.S. Department of Transportation and other federal or state agencies.

NOTICE

Improper owner maintenance during the warranty period may affect warranty coverage. For details, read the separate Owner's Handbook & Warranty Information booklet provided with the vehicle. If you're unsure about any service or maintenance procedure, have it done by an authorized HYUNDAI dealer.

OWNER MAINTENANCE

⚠ WARNING

Performing maintenance work on a vehicle can be dangerous. If you lack sufficient knowledge and experience or the proper tools and equipment to do the work, have it done by an authorized HYUNDAI dealer.

ALWAYS follow these precautions for performing maintenance work:

- **Park your vehicle on level ground, move the shift lever into the P (Park, for automatic transmission vehicle) position, place the ignition switch in the LOCK/OFF position.**
- **Block the tires (front and back) to prevent the vehicle from moving.**

  Remove loose clothing or jewelry that can become entangled in moving parts.
- **If you must run the engine during maintenance, do so out doors or in an area with plenty of ventilation.**
- **Keep flames, sparks, or smoking materials away from the battery and fuel-related parts.**

The following lists are vehicle checks and inspections that should be performed by the owner or an authorized HYUNDAI dealer at the frequencies indicated to help ensure safe, dependable operation of your vehicle.

Any adverse conditions should be brought to the attention of your dealer as soon as possible.

These Owner Maintenance vehicle checks are generally not covered by warranties and you may be charged for labor, parts and lubricants used.

Owner Maintenance Schedule

When you stop for fuel:

- Check the engine oil level.
- Check the coolant level in the engine coolant reservoir.
- Check the windshield washer fluid level.
- Check the for low or under-inflated tires.

⚠ WARNING

Be careful when checking your engine coolant level when the engine is hot. This may result in coolant being blown out of the opening and cause serious burns and other injuries.

While operating your vehicle:

- Note any changes in the sound of the exhaust or any smell of exhaust fumes in the vehicle.
- Check for vibrations in the steering wheel. Notice if there is any increased steering effort or looseness in the steering wheel, or change in its straight-ahead position.
- Notice if your vehicle constantly turns slightly or "pulls" to one side when traveling on smooth, level road.
- When stopping, listen and check for unusual sounds, pulling to one side, increased brake pedal travel or "hard-to-push" brake pedal.
- If any slipping or changes in the operation of your transmission occurs, check the transmission fluid level.
- Check the automatic transmission/ dual clutch transmission P (Park) function.
- Check the parking brake.
- Check for fluid leaks under your vehicle (water dripping from the air conditioning system during or after use is normal).

At least monthly:

- Check coolant level in the engine coolant reservoir.
- Check the operation of all exterior lights, including the brake lights, turn signals and hazard warning flashers.
- Check the inflation pressures of all tires including the spare for tires that are worn, show uneven wear, or are damaged.
- Check for loose wheel lug nuts.

At least twice a year:
(i.e., every Spring and Autumn)

- Check radiator, heater and air conditioning hoses for leaks or damage.
- Check windshield washer spray and wiper operation. Clean wiper blades with a clean cloth dampened with washer a fluid.
- Check headlamp alignment.
- Check muffler, exhaust pipes, shields and clamps.
- Check the seat belts for wear and function.

At least once a year:

- Clean body and door drain holes.
- Lubricate door hinges and hood hinges.
- Lubricate door and hood locks and latches.
- Lubricate door rubber weather strips.
- Lubricate door checker.
- Check the air conditioning system.
- Inspect and lubricate automatic transmission linkage and controls.
- Clean the battery and terminals.
- Check the brake fluid level.

SCHEDULED MAINTENANCE SERVICES

Follow Normal Maintenance Schedule if the vehicle is usually operated where none of the following conditions apply. If any of the following conditions apply, you must follow the Maintenance Under Severe Usage Conditions.

- Repeated short distance driving.
- Driving in dusty conditions or sandy areas.
- Extensive use of brakes.
- Driving in areas where salt or other corrosive materials are used.
- Driving on rough or muddy roads.
- Driving in mountainous areas.
- Extended periods of idling or low speed operation.
- Driving for a prolonged period in cold temperatures and/or extremely humid climates.
- More than 50% driving in heavy city traffic during hot weather above 90°F (32°C).

For additional information or assistance see your authorized HYUNDAI dealer.

Normal Maintenance Schedule (Nu 2.0 MPI)

MAINTENANCE INTERVALS / MAINTENANCE ITEM	Months	12	24	36	48	60	72	84	96	108	120	132	144	156	168	180
	Miles×1,000	7.5	15	22.5	30	37.5	45	52.5	60	67.5	75	82.5	90	97.5	105	112.5
	Km×1,000	12	24	36	48	60	72	84	96	108	120	132	144	156	168	180
Drive belts *1		At first, inspect at 60,000 miles or 72 months. Thereafter, inspect every 15,000 miles or 24 months														
Engine oil and engine oil filter		R	R	R	R	R	R	R	R	R	R	R	R	R	R	R
Fuel additives *2		Add fuel additives every 7,500 miles or 12 months														
Air cleaner filter		I	I	I	R	I	I	I	R	I	I	I	R	I	I	I
Spark plugs		Replace every 97,500 miles														
Rotate tires		Rotate tires every 7,500 miles														
Climate control air filter (for evaporator and blower unit)		Replace every 15,000 miles or 12 months														
Engine coolant		At first, replace at 120,000 miles or 10 years : Thereafter, replace every 30,000 miles or 24 months														
Vacuum hose		I	I	I	I	I	I	I	I	I	I	I	I	I	I	I
Battery condition		I	I	I	I	I	I	I	I	I	I	I	I	I	I	I

I : Inspect and if necessary, adjust, correct, clean or replace.

R : Replace or change.

*1 : The drive belt should be replaced when cracks occur or tension is reduced excessively.

*2 : If TOP TIER Detergent Gasoline is not available, one bottle of additive is recommended. Additives are available from your authorized HYUNDAI dealer along with information on how to use them. Do not mix other additives.

Normal Maintenance Schedule (Nu 2.0 MPI) (CONT)

MAINTENANCE INTERVALS / MAINTENANCE ITEM	Months	12	24	36	48	60	72	84	96	108	120	132	144	156	168	180
	Miles×1,000	7.5	15	22.5	30	37.5	45	52.5	60	67.5	75	82.5	90	97.5	105	112.5
	Km×1,000	12	24	36	48	60	72	84	96	108	120	132	144	156	168	180
Brake lines, hoses and connections		I	I	I	I	I	I	I	I	I	I	I	I	I	I	I
Disc brakes and pads		I	I	I	I	I	I	I	I	I	I	I	I	I	I	I
Steering gear rack, linkage and boots/ lower arm ball joint, upper arm ball joint		I	I	I	I	I	I	I	I	I	I	I	I	I	I	I
Driveshaft and boots		I	I	I	I	I	I	I	I	I	I	I	I	I	I	I
Suspension mounting bolts		I	I	I	I	I	I	I	I	I	I	I	I	I	I	I
Air conditioner refrigerant		I	I	I	I	I	I	I	I	I	I	I	I	I	I	I
Air conditioner compressor		I	I	I	I	I	I	I	I	I	I	I	I	I	I	I
Propeller shaft (AWD)			I		I		I		I		I		I		I	
Exhaust pipe and muffler		I	I	I	I	I	I	I	I	I	I	I	I	I	I	I
Automatic transaxle fluid		No check, No service required														
Rear differential oil (AWD) *3					I				I				I			
Transfer case oil (AWD)*3					I				I				I			

I : Inspect and if necessary, adjust, correct, clean or replace.

R : Replace or change.

*3 : Transfer case oil and rear differential oil should be changed anytime they have been submerged in water.

Normal Maintenance Schedule (Nu 2.0 MPI) (CONT)

MAINTENANCE INTERVALS / MAINTENANCE ITEM	Months	12	24	36	48	60	72	84	96	108	120	132	144	156	168	180
	Miles×1,000	7.5	15	22.5	30	37.5	45	52.5	60	67.5	75	82.5	90	97.5	105	112.5
	Km×1,000	12	24	36	48	60	72	84	96	108	120	132	144	156	168	180
Vapor hose, fuel filler cap and fuel tank			I		I		I		I		I		I		I	
Fuel tank air filter *4			I		I		I		I		I		I		I	
Fuel filter *4			I		I		I		I		I		I		I	
Fuel lines, hoses and connections					I				I				I			
Parking brake			I		I		I		I		I		I		I	
Brake fluid			I		I		I		I		I		I		I	

I : Inspect and if necessary, adjust, correct, clean or replace.

R : Replace or change.

*4 : Fuel filter & Fuel tank air filter are considered to be maintenance free but periodic inspection is recommended for this maintenance schedule depends on fuel quality. If there are some important safety matters like fuel flow restriction, surging, loss of power, hard starting problem, etc. replace the fuel filter immediately regardless of maintenance schedule and consult an authorized HYUNDAI dealer for details.

Maintenance Under Severe Usage Conditions (Nu 2.0 MPI)

The following items must be serviced more frequently on cars normally used under severe driving conditions. Refer to the chart below for the appropriate maintenance intervals.

I : Inspect and if necessary, adjust, correct, clean or replace.

R : Replace or change.

MAINTENANCE ITEM	MAINTENANCE OPERATION	MAINTENANCE INTERVALS	DRIVING CONDITION
Engine oil and filter	R	Every 3,750 miles or 6 months	A, B, C, D, E, F, G, H, I, J, K
Air cleaner filter	R	More frequently	C, E
Spark plugs	R	More frequently	A, B, H, I, K
Automatic transmission fluid	R	Every 60,000 miles	A, C, E, F, G, I
Front brake disc/pads, calipers	I	More frequently	C, D, G, H
Rear brake shoes or disc/pads	I	More frequently	C, D, G, F

MAINTENANCE ITEM	MAINTENANCE OPERATION	MAINTENANCE INTERVALS	DRIVING CONDITION
Parking brake	I	More frequently	C, D, G, H
Steering gear box, linkage & boots/ lower arm ball joint, upper arm ball joint	I	More frequently	C, D, E, F, G, H, I
Drive shafts and boots	I	More frequently	C, D, E, F, G, H, I, J
Climate control air filter (for evaporator and blower unit)	R	More frequently	C, E
Propeller shaft (AWD)	I	More frequently	C, D, E, F, G, H, I, J
Transfer case oil (AWD)	R	Every 75,000 miles (120,000 km)	C, D, E, G, H, I, J
Rear differential oil (AWD)	R	Every 75,000 miles (120,000 km)	C, D, E, G, H, I, J

Severe Driving Conditions

A - Repeatedly driving short distances of less than 5 miles (8 km) in normal temperature or less than 10 miles (16 km) in freezing temperature
B - Extensive engine idling or low speed driving for long distances
C - Driving on rough, dusty, muddy, unpaved, graveled or salt-spread roads
D - Driving in areas using salt or other corrosive materials or in very cold weather
E - Driving in sandy areas
F - Driving in heavy traffic area over 90°F (32°C)
G - Driving on uphill, downhill, or mountain road
H - Towing a Trailer, or using a camper, or roof rack
I - Driving as a patrol car, taxi, other commercial use or vehicle towing
J - Driving over 106 mph (170 km/h)
K - Frequently driving in stop-and-go conditions

Normal Maintenance Schedule (Gamma 1.6 T-GDI)

MAINTENANCE INTERVALS / MAINTENANCE ITEM	Months	12	24	36	48	60	72	84	96	108	120	132	144	156	168	180
	Miles×1,000	6	12	18	24	30	36	42	48	54	60	66	72	78	84	90
	Km×1,000	10	20	30	40	50	60	70	80	90	100	110	120	130	140	150
Drive belts *1		At first, inspect at 60,000 miles or 72 months. Thereafter, inspect every 12,000 miles or 24 months														
Engine oil and engine oil filter		R	R	R	R	R	R	R	R	R	R	R	R	R	R	R
Fuel additives *2		Add fuel additives every 6,000 miles or 12 months														
Air cleaner filter		I	I	I	R	I	I	I	R	I	I	I	R	I	I	I
Spark plugs		Replace every 42,000 miles														
Valve clearance *3		Inspect every 60,000 miles or 72 months														
Rotate tires		Rotate tires every 6,000 miles														
Climate control air filter (for evaporate and blower unit)		Replace every 12,000 miles or 12 months.														
Engine coolant		At first, replace at 120,000 miles or 10 years : Thereafter, replace every 30,000 miles or 24 months														

I : Inspect and if necessary, adjust, correct, clean or replace.

R : Replace or change.

*1 : The drive belt should be replaced when cracks occur or tension is reduced excessively.

*2 : If TOP TIER Detergent Gasoline is not available, one bottle of additive is recommended. Additives are available from your authorized HYUNDAI dealer along with information on how to use them. Do not mix other additives.

*3 : Inspect for excessive valve noise and/or engine vibration and adjust if necessary. Have an authorized HYUNDAI dealer perform the operation.

Normal Maintenance Schedule (Gamma 1.6 T-GDI) (CONT)

MAINTENANCE INTERVALS / MAINTENANCE ITEM	Months	12	24	36	48	60	72	84	96	108	120	132	144	156	168	180
	Miles×1,000	6	12	18	24	30	36	42	48	54	60	66	72	78	84	90
	Km×1,000	10	20	30	40	50	60	70	80	90	100	110	120	130	140	150
Intercooler, in/out hose, air intake hose		I	I	I	I	I	I	I	I	I	I	I	I	I	I	I
Vacuum hose		I	I	I	I	I	I	I	I	I	I	I	I	I	I	I
Battery condition		I	I	I	I	I	I	I	I	I	I	I	I	I	I	I
Brake lines, hoses and connections		I	I	I	I	I	I	I	I	I	I	I	I	I	I	I
Disc brakes and pads		I	I	I	I	I	I	I	I	I	I	I	I	I	I	I
Steering gear rack, linkage and boots/ lower arm ball joint, upper arm ball joint		I	I	I	I	I	I	I	I	I	I	I	I	I	I	I
Driveshaft and boots		I	I	I	I	I	I	I	I	I	I	I	I	I	I	I
Suspension mounting bolts		I	I	I	I	I	I	I	I	I	I	I	I	I	I	I
Air conditioner refrigerant		I	I	I	I	I	I	I	I	I	I	I	I	I	I	I
Air conditioner compressor		I	I	I	I	I	I	I	I	I	I	I	I	I	I	I
Propeller shaft (AWD)			I		I		I		I		I		I		I	

I : Inspect and if necessary, adjust, correct, clean or replace.

R : Replace or change.

Normal Maintenance Schedule (Gamma 1.6 T-GDI) (CONT)

MAINTENANCE INTERVALS / MAINTENANCE ITEM	Months	12	24	36	48	60	72	84	96	108	120	132	144	156	168	180
	Miles×1,000	6	12	18	24	30	36	42	48	54	60	66	72	78	84	90
	Km×1,000	10	20	30	40	50	60	70	80	90	100	110	120	130	140	150
Exhaust pipe and muffler		I	I	I	I	I	I	I	I	I	I	I	I	I	I	I
Dual clutch transmission fluid					I				I				I			
Rear differential oil (AWD) *4					I				I				I			
Transfer case oil (AWD)*4					I				I				I			
Vapor hose, fuel filler cap and fuel tank			I		I		I		I		I		I		I	
Fuel tank air filter *5			I		I		I		I		I		I		I	
Fuel filter *5			I		I		I		I		I		I		I	
Fuel lines, hoses and connections					I				I				I			
Parking brake			I		I		I		I		I		I		I	
Brake fluid			I		I		I		I		I		I		I	

I : Inspect and if necessary, adjust, correct, clean or replace.

R : Replace or change.

*4 : Transfer case oil and rear differential oil should be changed anytime they have been submerged in water.

*5 : Fuel filter & Fuel tank air filter are considered to be maintenance free but periodic inspection is recommended for this maintenance schedule depends on fuel quality. If there are some important safety matters like fuel flow restriction, surging, loss of power, hard starting problem, etc. replace the fuel filter immediately regardless of maintenance schedule and consult an authorized HYUNDAI dealer for details.

Maintenance Under Severe Usage Conditions (Gamma 1.6 T-GDI)

The following items must be serviced more frequently on cars normally used under severe driving conditions. Refer to the chart below for the appropriate maintenance intervals.

I : Inspect and if necessary, adjust, correct, clean or replace.

R : Replace or change.

MAINTENANCE ITEM	MAINTENANCE OPERATION	MAINTENANCE INTERVALS	DRIVING CONDITION
Engine oil and filter	R	Every 3,000 miles or 6 months	A, B, C, D, E, F, G, H, I, J, K
Air cleaner filter	R	More frequently	C, E
Spark plugs	R	More frequently	A, B, H, I, K
Dual clutch transmission fluid	R	Every 72,000 miles	C, D, E, F, G, H, I, J
Front brake disc/pads, calipers	I	More frequently	C, D, G, H
Rear brake shoes or disc/pads	I	More frequently	C, D, G, F

MAINTENANCE ITEM	MAINTENANCE OPERATION	MAINTENANCE INTERVALS	DRIVING CONDITION
Parking brake	I	More frequently	C, D, G, H
Steering gear box, linkage & boots/ lower arm ball joint, upper arm ball joint	I	More frequently	C, D, E, F, G, H, I
Drive shafts and boots	I	More frequently	C, D, E, F, G, H, I, J
Climate control air filter (for evaporator and blower unit)	R	More frequently	C, E
Propeller shaft (AWD)	I	More frequently	C, D, E, F, G, H, I, J
Transfer case oil (AWD)	R	Every 75,000 miles (120,000 km)	C, D, E, G, H, I, J
Rear differential oil (AWD)	R	Every 75,000 miles (120,000 km)	C, D, E, G, H, I, J

Severe Driving Conditions

A - Repeatedly driving short distances of less than 5 miles (8 km) in normal temperature or less than 10 miles (16 km) in freezing temperature
B - Extensive engine idling or low speed driving for long distances
C - Driving on rough, dusty, muddy, unpaved, graveled or salt-spread roads
D - Driving in areas using salt or other corrosive materials or in very cold weather
E - Driving in sandy areas
F - Driving in heavy traffic area over 90°F (32°C)
G - Driving on uphill, downhill, or mountain road
H - Towing a Trailer, or using a camper, or roof rack
I - Driving as a patrol car, taxi, other commercial use or vehicle towing
J - Driving over 106 mph (170 km/h)
K - Frequently driving in stop-and-go conditions

EXPLANATION OF SCHEDULED MAINTENANCE ITEMS

Engine Oil and Filter

The engine oil and filter should be changed at the intervals specified in the maintenance schedule. If the vehicle is being driven in severe conditions, more frequent oil and filter changes are required.

Drive Belts

Inspect all drive belts for evidence of cuts, cracks, excessive wear or oil saturation and replace if necessary. Drive belts should be checked periodically for proper tension and adjusted as necessary.

Fuel Filter

A clogged-up fuel filter may limit the vehicle driving speed, damage the emission system, and cause the hard starting. When a considerable amount of foreign substances are accumulated in the fuel tank, the fuel filter should be replaced.

Upon installing a new fuel filter, operate the engine for several minutes, and check the connections for any leakages. Fuel filters should be installed by an authorized HYUNDAI dealer.

Fuel Lines, Fuel Hoses and Connections

Check the fuel lines, fuel hoses and connections for leakage and damage. Have an authorized HYUNDAI dealer replace any damaged or leaking parts immediately.

Vapor Hose and Fuel Filler Cap

The vapor hose and fuel filler cap should be inspected at those intervals specified in the maintenance schedule. Make sure a new vapor hose or fuel filler cap is correctly replaced.

Vacuum Crankcase Ventilation Hoses (if equipped)

Inspect the surface of hoses for evidence of heat and/or mechanical damage. Hard and brittle rubber, cracking, tears, cuts, abrasions, and excessive swelling indicate deterioration. Particular attention should be paid to examine those hose surfaces nearest to high heat sources, such as the exhaust manifold.

Inspect the hose routing to ensure that the hoses do not come in contact with any heat source, sharp edges or moving component which might cause heat damage or mechanical wear. Inspect all hose connections, such as clamps and couplings, to make sure they are secure, and that no leaks are present. Hoses should be replaced immediately if there is any evidence of deterioration or damage.

Air Cleaner Filter

A genuine HYUNDAI air cleaner filter is recommended when the filter is replaced.

Spark Plugs

Make sure to install new spark plugs of the correct heat range.

Cooling System

Check cooling system components, such as radiator, coolant reservoir, hoses and connections for leakage and damage. Replace any damaged parts.

Engine Coolant

The coolant should be changed at the intervals specified in the maintenance schedule.

Automatic Transmission Fluid (if equipped)

Automatic transmission fluid should not be checked under normal usage conditions. But in severe conditions, the fluid should be changed at an authorized HYUNDAI dealer in accordance to the scheduled maintenance at the beginning of this chapter.

NOTICE

Automatic transmission fluid color is red when new.

As the vehicle is driven, the automatic transmission fluid will begin to look darker. This is a normal condition and you should not judge the need to replace the fluid based upon the changed color.

⚠ CAUTION

The use of a non-specified fluid could result in transmission malfunction and failure. Use only the specified automatic transmission fluid (refer to "Recommended Lubricants and Capacities" in chapter 8).

Dual Clutch Transmission Fluid (if equipped)

Inspect the dual clutch transmission fluid according to the maintenance schedule.

Brake Hoses and Lines

Visually check for proper installation, chafing, cracks, deterioration and any leakage. Replace any deteriorated or damaged parts immediately.

Brake Fluid

Check the brake fluid level in the brake fluid reservoir. The level should be between the MIN and the MAX marks on the side of the reservoir. Use only hydraulic brake fluid conforming to DOT 3 or DOT 4 specification.

Parking Brake

Inspect the parking brake system including the parking brake pedal and cables.

Brake Discs, Pads, Calipers and Rotors

Check the pads for excessive wear, discs for run out and wear, and calipers for fluid leakage.

Exhaust Pipe and Muffler

Visually inspect the exhaust pipes, muffler and hangers for cracks, deterioration, or damage. Start the engine and listen carefully for any exhaust gas leakage. Tighten connections or replace parts as necessary.

Suspension Mounting Bolts

Check the suspension connections for looseness or damage. Retighten to the specified torque.

Steering Gear Box, Linkage & Boots/Lower Arm Ball Joint

With the vehicle stopped and the engine off, check for excessive freeplay in the steering wheel. Check the linkage for bends or damage. Check the dust boots and ball joints for deterioration, cracks, or damage.

Replace any damaged parts.

Drive Shafts and Boots

Check the drive shafts, boots and clamps for cracks, deterioration, or damage. Replace any damaged parts and, if necessary, repack the grease.

Air Conditioning Refrigerant

Check the air conditioning lines and connections for leakage and damage.

ENGINE OIL

Checking the Engine Oil Level

1. Follow all of the oil manufacturer's precautions.
2. Be sure the vehicle is on the level ground in P (Park) with the parking brake set. If possible, block the wheels.
3. Turn the engine on and allow the engine to reach normal operating temperature.
4. Turn the engine off and wait about five minutes for the oil to return to the oil pan.
5. Pull the dipstick out, wipe it clean, and re-insert it fully.

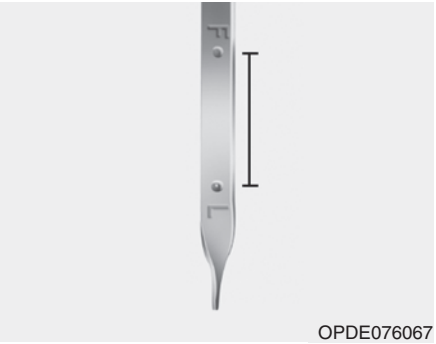

OPDE076067

6. Pull the dipstick out again and check the level. The level should be between F and L.

■ 1.6 T-GDI

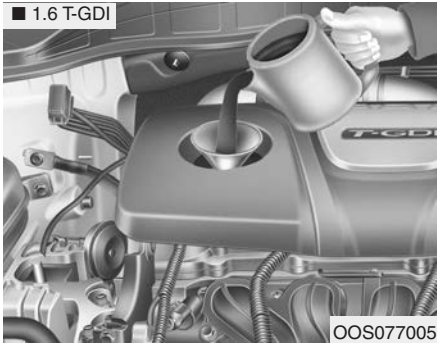

OOS077005

■ 2.0 MPI

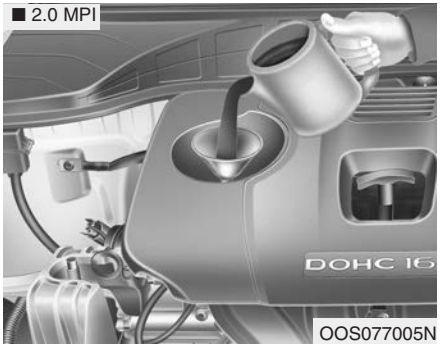

OOS077005N

7. If it is near or at L, add enough oil to bring the level to F.

Use only the specified engine oil. **(refer to "Recommended Lubricants and Capacities" in chapter 8).**

NOTICE

To prevent damage to your engine:

- **Do not overfill with engine oil. Add oil in small quantities and recheck level to ensure engine is not overfilled.**
- **Do not spill engine oil when adding or changing engine oil. Use a funnel to help prevent oil from being spilled on engine components. Wipe off spilled oil immediately.**

Checking the Engine Oil and Filter

Have engine oil and filter changed by an authorized HYUNDAI dealer according to the Maintenance Schedule at the beginning of this chapter.

⚠ WARNING

CALIFORNIA PROPOSITION 65 WARNING

Engine oil contains chemicals known to the State of California to cause cancer, birth defects and reproductive harm. Used engine oil may cause irritation or cancer of the skin if left in contact with the skin for prolonged periods of time. Always protect your skin by washing your hands thoroughly with soap and warm water as soon as possible after handling used oil.

ENGINE COOLANT

The high-pressure cooling system has a reservoir filled with year-round antifreeze coolant. The reservoir is filled at the factory.

Check the antifreeze protection and coolant level at least once a year, at the beginning of the winter season and before traveling to a colder climate.

Checking the Engine Coolant Level

■ 1.6 T-GDI

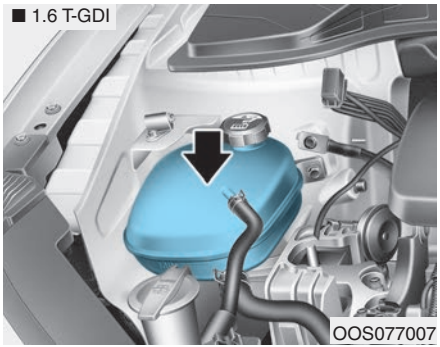

OOS077007

■ 2.0 MPI

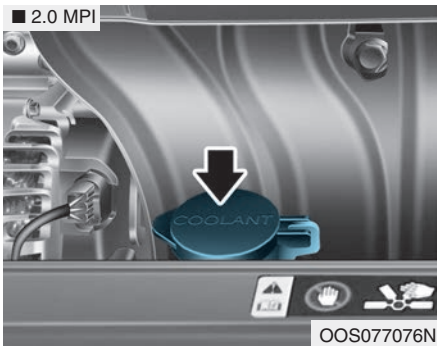

OOS077076N

Check the condition and connections of all cooling system hoses and heater hoses. Replace any swollen or deteriorated hoses.

The coolant level should be filled between the F and the L marks on the side of the coolant reservoir when the engine is cool.

If the coolant level is low, add enough distilled (deionized) water to bring the level to the F mark, but do not overfill. If frequent additions are required, see an authorized HYUNDAI dealer for a cooling system inspection.

Recommended engine coolant

- When adding coolant, use only distilled (deionized) water for your vehicle and never mix hard water in the coolant filled at the factory.
- An improper coolant mixture can result in severe malfunction or engine damage.
- The engine in your vehicle has aluminum engine parts and must be protected by an ethylene-glycol with phosphate based coolant to prevent corrosion and freezing.
- Do not use alcohol or methanol coolant or mix them with the specified coolant.

- Do not use a solution that contains more than 60% antifreeze or less than 35% antifreeze, which would reduce the effectiveness of the solution.

For mixing percentage, refer to the following table:

Ambient Temperature	Mixture Percentage (volume)	
	Antifreeze	Water
5°F (-15°C)	35	65
-13°F (-25°C)	40	60
-31°F (-35°C)	50	50
-49°F (-45°C)	60	40

Information

If in doubt about the mix ratio, a 50% water and 50% antifreeze mix is the easiest to mix together as it will be the same quantity of each. It is suitable to use for most temperature ranges of - 31°F and higher.

⚠ WARNING

For 1.6 T-GDI

Make sure the coolant cap is properly closed after refilling coolant. Otherwise the engine could be overheated while driving.

■ Engine room front view

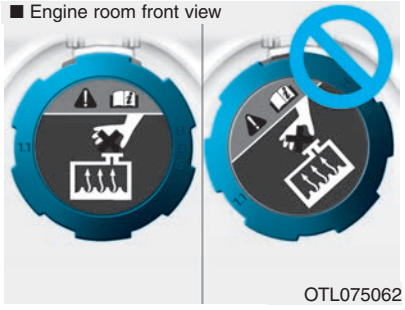

1. Check if the coolant cap label is straight In front.

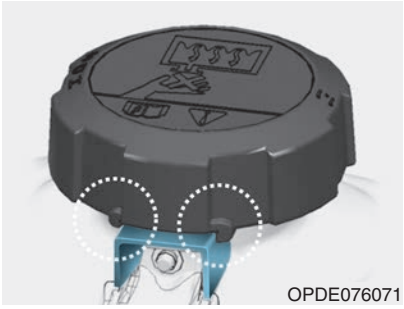

2. Make sure that the tiny protrusions inside the coolant cap is securely interlocked.

■ 1.6 T-GDI

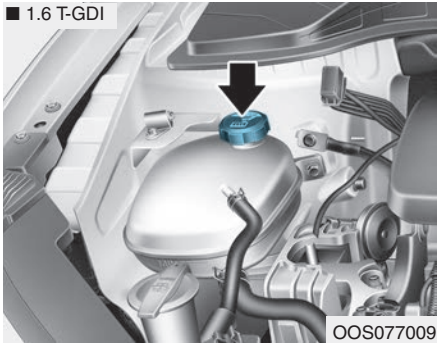

OOS077009

■ 2.0 MPI

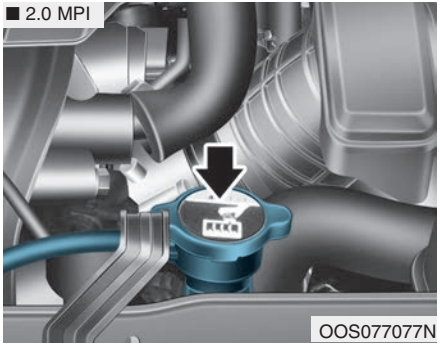

OOS077077N

⚠ WARNING

Never remove the engine coolant reservoir tank/radiator cap or the drain plug while the engine and radiator are hot. Hot coolant and steam may blow out under pressure, causing serious injury.

Turn the engine off and wait until the engine cools down. Use extreme care when removing the engine coolant reservoir tank/radiator cap. Wrap a thick towel around it, and turn it counterclockwise slowly to the first stop. Step back while the pressure is released from the cooling system. When you are sure all the pressure has been released, press down on the cap, using a thick towel, and continue turning counterclockwise to remove it.

⚠ WARNING

The electric motor for the cooling fan may continue to operate or start up when the engine is not running and can cause serious injury. Keep hands, clothing and tools away from the rotating fan blades of the cooling fan.

The electric motor for the cooling fan is controlled by engine coolant temperature, refrigerant pressure and vehicle speed. As the engine coolant temperature decreases, the electric motor will automatically shut off. This is a normal condition. If your vehicle is equipped with GDI, the electric motor for the cooling fan may begin to operate at any time and continue to operate until you disconnect the negative battery cable.

Changing Engine Coolant

Have coolant changed by an authorized HYUNDAI dealer according to the Maintenance Schedule at the beginning of this chapter.

⚠ WARNING

Do not use engine coolant or antifreeze in the washer fluid reservoir.

Engine coolant can severely obscure visibility when sprayed on the windshield and may cause loss of vehicle control resulting in an accident.

Engine coolant may also cause damage to paint and body trim.

NOTICE

To prevent damage to engine parts, put a thick towel around the radiator cap before refilling the coolant to prevent the coolant from overflowing into engine parts, such as the alternator.

BRAKE FLUID

Checking the Brake Fluid Level

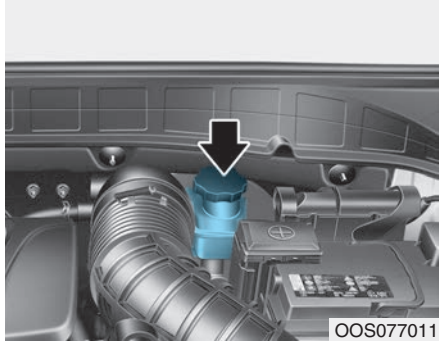

Check the fluid level in the reservoir periodically. The fluid level should be between MAX and MIN marks on the side of the reservoir.

Before removing the reservoir cap and adding brake fluid, clean the area around the reservoir cap thoroughly to prevent brake fluid contamination.

If the level is low, add the specified brake fluid to the MAX level. The level will fall with accumulated mileage. This is a normal condition associated with the wear of the brake linings. If the fluid level is excessively low, have the brake system checked by an authorized HYUNDAI dealer.

⚠ WARNING

If the brake system requires frequent additions of fluid this could indicate a leak in the brake system. Have the vehicle inspected by an authorized HYUNDAI dealer.

⚠ WARNING

Do not allow brake fluid to come in contact with your eyes. If brake fluid comes in contact with your eyes, flush your eyes with clean water for at least 15 minutes and get immediate medical attention.

NOTICE

- **Do not allow brake fluid to contact the vehicle's body paint, as paint damage will result.**
- **Brake fluid, which has been exposed to open air for an extended time should NEVER be used as its quality cannot be guaranteed. It should be disposed of properly.**
- **Do not use the wrong kind of brake fluid. A few drops of mineral based oil, such as engine oil, in your brake system can damage brake system parts.**

i Information

Use only the specified brake fluid (refer to "Recommended Lubricants and Capacities" in chapter 8).

WASHER FLUID

Checking the Washer Fluid Level

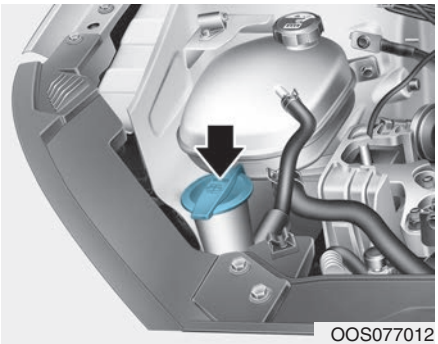

Check the fluid level in the washer fluid reservoir and add fluid if necessary. Plain water may be used if washer fluid is not available. However, use washer solvent with antifreeze characteristics in cold climates to prevent freezing.

⚠ WARNING

To prevent serious injury or death, take the following safety precautions when using washer fluid:

- **Do not use engine coolant or antifreeze in the washer fluid reservoir.**

  Engine coolant can severely obscure visibility when sprayed on the windshield and may cause loss of vehicle control resulting in an accident or damage to paint and body trim.
- **Do not allow sparks or flames to contact the washer fluid or the washer fluid reservoir. Washer fluid may contain alcohol and can be flammable.**
- **Do not drink washer fluid and avoid contact with skin. Washer fluid is harmful to humans and animals.**
- **Keep washer fluid away from children and animals.**

PARKING BRAKE

Checking the Parking Brake

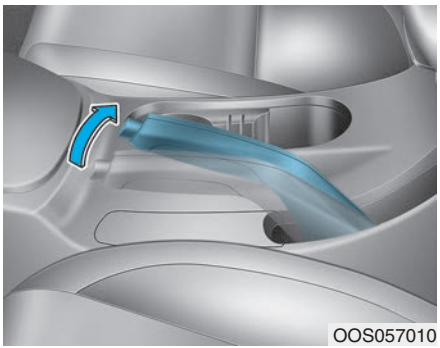

Check the stroke of the parking brake by counting the number of "clicks" heard while fully applying it from the released position. Also, the parking brake alone should securely hold the vehicle on a fairly steep grade. If the stroke is more or less than specified, have the parking brake adjusted by an authorized HYUNDAI dealer.

Stroke : 5~7 clicks at a force of 44 lbs (20 kg, 196 N)

AIR CLEANER

Filter Replacement

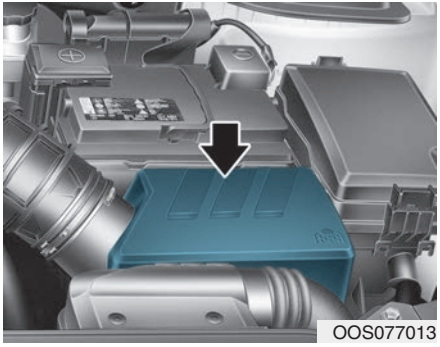
OOS077013

The air cleaner filter can be cleaned for inspection using compressed air.

Do not attempt to wash or to rinse it, as water will damage the filter.

If soiled, the air cleaner filter must be replaced.

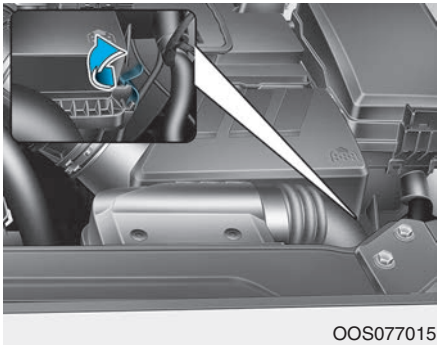
OOS077015

1. Loosen the air cleaner cover attaching clips and open the cover.
2. Wipe the inside of the air cleaner.

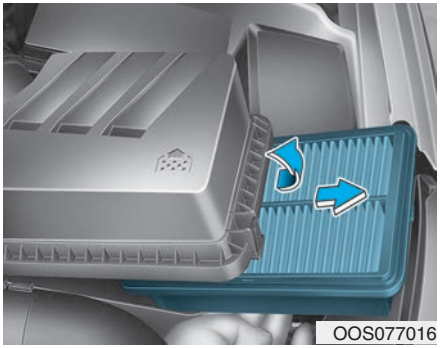
OOS077016

3. Replace the air cleaner filter.
4. Lock the cover with the cover attaching clips.
5. Check that the cover is firmly installed.

Information

If the vehicle is operated in extremely dusty or sandy areas, replace the element more often than the usual recommended intervals (refer to "Maintenance Under Severe Usage Conditions" in this chapter).

NOTICE

- **Do not drive with the air cleaner filter removed. This will result in excessive engine wear.**
- **When removing the air cleaner filter, be careful that dust or dirt does not enter the air intake, or damage may result.**
- **Use HYUNDAI genuine parts. Use of non-genuine parts could damage the air flow sensor.**

CLIMATE CONTROL AIR FILTER

Filter Inspection

The climate control air filter should be replaced according to the Maintenance Schedule. If the vehicle is operated in severely air-polluted cities or on dusty rough roads for a long period, it should be inspected more frequently and replaced earlier. When you replace the climate control air filter, replace it performing the following procedure, and be careful to avoid damaging other components.

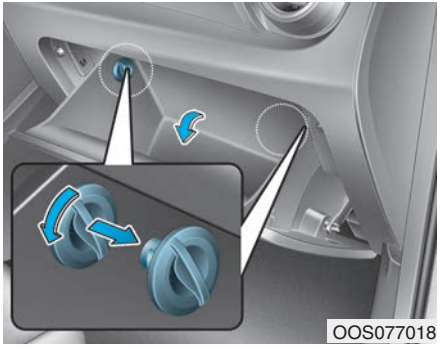

1. With the glove box open, remove the stoppers on both sides to allow the glove box to hang freely on the hinges.

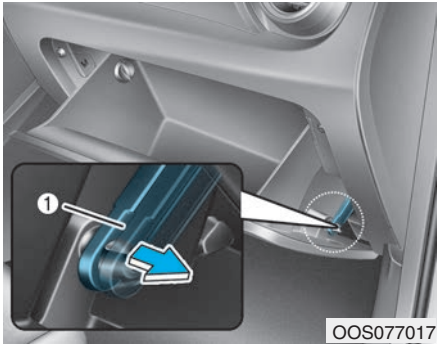

2. Remove the support rod (1).

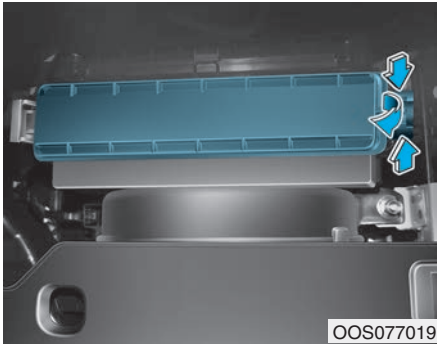

3. Remove the climate control air filter case while pressing the lock on the right side of the cover.

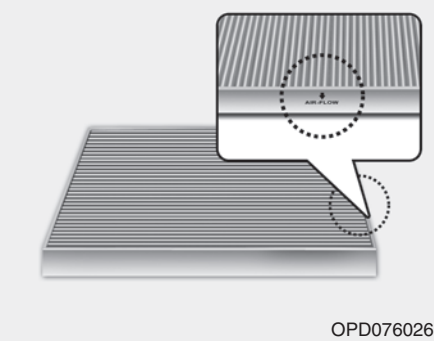

4. Replace the climate control air filter.
5. Reassemble in the reverse order of disassembly.

NOTICE

Install a new climate control air filter in the correct direction with the arrow symbol (↓) facing downwards, otherwise, it may be noisy and the effectiveness of the filter may be reduced.

WIPER BLADES

Blade Inspection

Contamination of either the windshield or the wiper blades with foreign matter can reduce the effectiveness of the windshield wiper functionality. Common sources of contamination are insects, tree sap, and hot wax treatments used by some commercial car washes. If the blades are not wiping properly, clean both the window and the blades with a clean cloth dampened with washer fluid.

NOTICE

To prevent damage to the wiper blades, arms or other components, do not:

- **Use gasoline, kerosene, paint thinner, or other solvents on or near them.**
- **Attempt to move the wipers manually.**
- **Use non-specified wiper blades.**

Information

Commercial hot waxes applied by automatic car washes have been known to make the windshield difficult to clean.

Blade Replacement

When the wipers no longer clean adequately, the blades may be worn or cracked, and require replacement.

NOTICE

To prevent damage to the wiper arms or other components, do not attempt to move the wipers manually.

NOTICE

The use of a non-specified wiper blade could result in wiper malfunction and failure.

NOTICE

- **In order to prevent damage to the hood and the wiper arms, the wiper arms should only be lifted when in the top wiping position.**
- **Always return the wiper arms to the windshield before driving.**

Front windshield wiper blade replacement

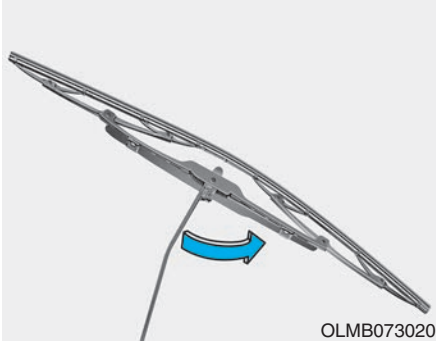

■ Type A

1. Put the front windshield wipers into the service position.
2. Raise the wiper arm and slightly rotate the wiper blade assembly to expose the plastic locking clip.

NOTICE

Do not allow the wiper arm to fall against the windshield, since it may chip or crack the windshield.

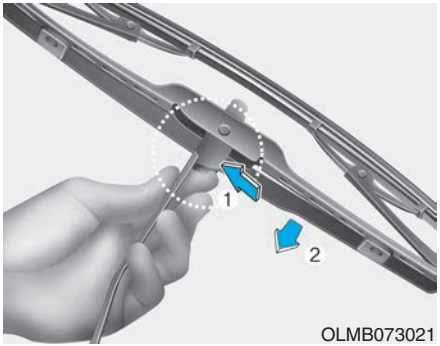

OLMB073021

OLMB073022

3. Press the clip (1) and slide the blade assembly downward (2).
4. Lift it off the arm.
5. Install the blade assembly in the reverse order of removal.
6. Return the wiper arm on the windshield.

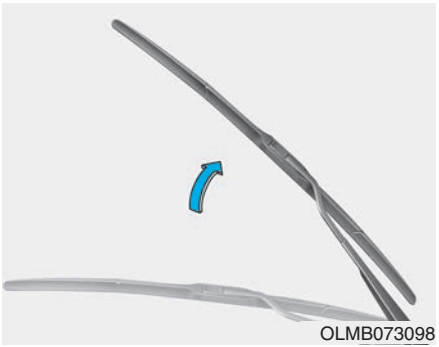
OLMB073098

■ **Type B**

1. Raise the wiper arm.

NOTICE

Do not allow the wiper arm to fall against the windshield, since it may chip or crack the windshield.

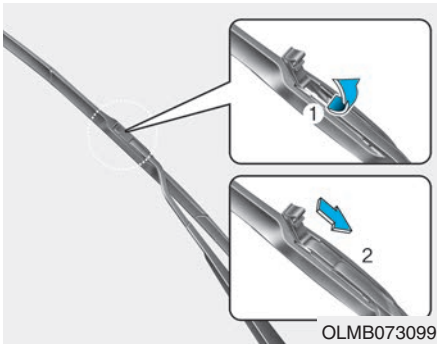

OLMB073099

OLMB073100

2. Lift up the wiper blade clip (1). Then pull down the blade assembly (2) and remove it.
3. Install the new blade assembly in the reverse order of removal.
4. Return the wiper arm on the windshield.

Rear window wiper blade replacement

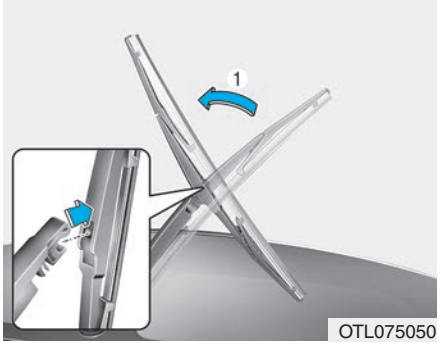

OTL075050

1. Raise the wiper arm and pull out the wiper blade assembly.

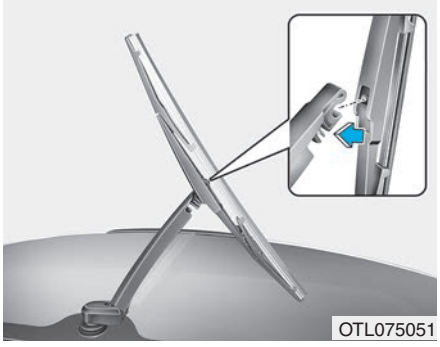
OTL075051

2. Install the new blade assembly by inserting the center part into the slot in the wiper arm until it clicks into place.
3. Make sure the blade assembly is installed firmly by trying to pull it slightly.

To prevent damage to the wiper arms or other components, have the wiper blades replaced by an authorized HYUNDAI dealer.

BATTERY

⚠ WARNING

To prevent SERIOUS INJURY or DEATH to you or bystanders, always follow these precautions when working near or handling the battery:

Always read and follow instructions carefully when handling a battery.

Wear eye protection designed to protect the eyes from acid splashes.

Keep all flames, sparks, or smoking materials away from the battery.

Hydrogen is always present in battery cells, is highly combustible, and may explode if ignited.

Keep batteries out of reach of children.

Batteries contain sulfuric acid which is highly corrosive. Do not allow acid to contact your eyes, skin or clothing.

If acid gets into your eyes, flush your eyes with clean water for at least 15 minutes and get immediate medical attention. If acid gets on your skin, thoroughly wash the area. If you feel pain or a burning sensation, get medical attention immediately.

- **When lifting a plastic-cased battery, excessive pressure on the case may cause battery acid to leak. Lift with a battery carrier or with your hands on opposite corners.**
- **Do not attempt to jump start your vehicle if your battery is frozen.**

- **NEVER attempt to recharge the battery when the vehicle's battery cables are connected to the battery.**
- **The electrical ignition system works with high voltage. NEVER touch these components with the engine running or when the ignition switch is in the ON position.**

⚠ WARNING

CALIFORNIA PROPOSITION 65 WARNING

Battery posts, terminals, and related accessories contain lead and lead compounds, chemicals known to the State of California to cause cancer, birth defects and reproductive harm. Batteries also contain other chemicals known to the State of California to cause cancer. Wash hands after handling.

NOTICE

- **When you do not use the vehicle for a long time in a low temperature area, disconnect the battery and keep it indoors.**
- **Always charge the battery fully to prevent battery case damage in low temperature areas.**

For Best Battery Service

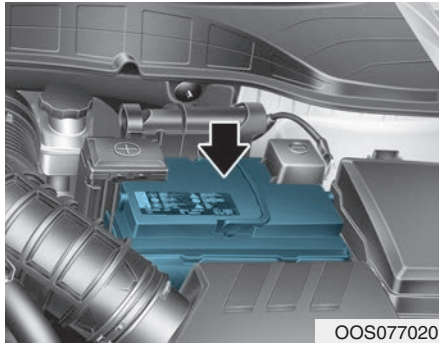

- Keep the battery securely mounted.
- Keep the battery top clean and dry.
- Keep the terminals and connections clean, tight, and coated with petroleum jelly or terminal grease.
- Rinse any spilled acid from the battery immediately with a solution of water and baking soda.

Battery Recharging

⚠ WARNING

Always follow these instructions when recharging your vehicle's battery to avoid the risk of SERIOUS INJURY or DEATH from explosions or acid burns:

- **Before performing maintenance or recharging the battery, turn off all accessories and place the ignition switch to the LOCK/OFF position.**
- **Keep all flames, sparks, or smoking materials away from the battery.**
- **Always work outdoors or in an area with plenty of ventilation.**
- **Wear eye protection when checking the battery during charging.**
- **The battery must be removed from the vehicle and placed in a well ventilated area.**

- **Watch the battery during charging, and stop or reduce the charging rate if the battery cells begin boiling violently.**
- **The negative battery cable must be removed first and installed last when the battery is disconnected. Disconnect the battery charger in the following order:**
  (1) Turn off the battery charger main switch.
  (2) Unhook the negative clamp from the negative battery terminal.
  (3) Unhook the positive clamp from the positive battery terminal.
- **Always use a genuine HYUNDAI approved battery when you replace the battery.**

By jump starting

After a jump start from a good battery, drive the vehicle for 20-30 minutes before it is shutoff. The vehicle may not restart if you shut it off before the battery had a chance to adequately recharge. See "Jump Starting" in chapter 6 for more information on jump starting procedures.

Information

An inappropriately disposed battery can be harmful to the environment and human health. Dispose of the battery according to your local law(s) or regulations.

Reset Features

The following items may need to be reset after the battery has been discharged or the battery has been disconnected. See chapter 3 or 4 for:

- Power Windows
- Trip Computer
- Climate Control System
- Clock
- Audio System
- Sunroof

TIRES AND WHEELS

⚠ WARNING

Tire failure may cause loss of vehicle control resulting in an accident. To reduce risk of SERIOUS INJURY or DEATH, take the following precautions:

- **Inspect your tires monthly for proper inflation as well as wear and damage.**
- **The recommended cold tire pressure for your vehicle can be found in this manual and on the tire label located on the driver's side center pillar. Always use a tire pressure gauge to measure tire pressure. Tires with too much or too little pressure wear unevenly causing poor handling.**
- **Check the pressure of the spare every time you check the pressure of the other tires on your vehicle.**
- **Replace tires that are worn, show uneven wear, or are damaged. Worn tires can cause loss of braking effectiveness, steering control, or traction.**
- **ALWAYS replace tires with the same size as each tire that was originally supplied with this vehicle. Using tires and wheels other than the recommended sizes could cause unusual handling characteristics, poor vehicle control, or negatively affect your vehicle's Anti-Lock Brake System (ABS) resulting in a serious accident.**

Tire Care

For proper maintenance, safety, and maximum fuel economy, you must always maintain recommended tire inflation pressures and stay within the load limits and weight distribution recommended for your vehicle.

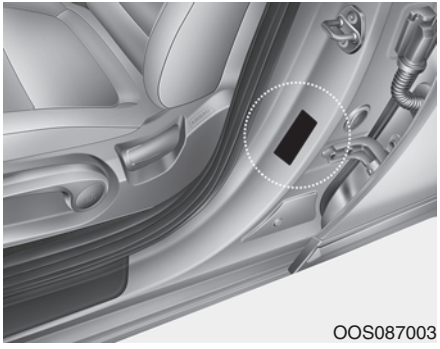

All specifications (sizes and pressures) can be found on a label attached to the driver's side center pillar.

Recommended Cold Tire Inflation Pressures

All tire pressures (including the spare) should be checked when the tires are cold. "Cold tires" means the vehicle has not been driven for at least three hours or has been driven for less than one mile (1.6 km).

Warm tires normally exceed recommended cold tire pressures by 4 to 6 psi (28 to 41 kPa). Do not release air from warm tires to adjust the pressure or the tires will be under-inflated. For recommended inflation pressure, refer to "Tire and Wheels" in chapter 8.

⚠ WARNING

Recommended pressures must be maintained for the best ride, vehicle handling, and minimum tire wear.

Over-inflation or under-inflation can reduce tire life, adversely affect vehicle handling, and lead to sudden tire failure that could result in loss of vehicle control resulting in an accident.

Severe under-inflation can lead to severe heat build-up, causing blowouts, tread separation and other tire failures that can result in the loss of vehicle control resulting in an accident. This risk is much higher on hot days and when driving for long periods at high speeds.

⚠ CAUTION

- **Under-inflation results in excessive wear, poor handling and reduced fuel economy. Wheel deformation is also possible. Keep your tire pressures at the proper levels. If a tire frequently needs refilling, have it checked by an authorized HYUNDAI dealer.**
- **Over-inflation produces a harsh ride, excessive wear at the center of the tire tread, and a greater possibility of damage from road hazards.**

Check Tire Inflation Pressure

Check your tires, including the spare tire, once a month or more.

How to check

Use a good quality tire pressure gauge to check tire pressure. You can not tell if your tires are properly inflated simply by looking at them. Radial tires may look properly inflated when they are under-inflated.

Remove the valve cap from the tire valve stem. Press the tire gauge firmly onto the valve to get a pressure measurement. If the cold tire inflation pressure matches the recommended pressure on the tire label located on the driver's side center pillar or in this manual. No further adjustment is necessary. If the pressure is low, add air until you reach the recommended pressure. Make sure to put the valve caps back on the valve stems. Without the valve cap, dirt or moisture could get into the valve core and cause air leakage. If a valve cap is missing, install a new one as soon as possible.

If you overfill the tire, release air by pushing on the metal stem in the center of the tire valve. Recheck the tire pressure with the tire gauge. Be sure to put the valve caps back on the valve stems. Without the valve cap, dirt or moisture could get into the valve core and cause air leakage. If a valve cap is missing, install a new one as soon as possible.

A cold tire means the vehicle has been sitting for 3 hours and driven for less than 1 mile (1.6 km) in that 3 hour period.

Allow the tire to cool before measuring the inflation pressure. Always be sure the tire is cold before inflating to the recommended pressure.

Tire Rotation

To equalize tread wear, HYUNDAI recommends that the tires be rotated according to the maintenance schedule or sooner if irregular wear develops.

During rotation, check the tires for correct balance.

When rotating tires, check for uneven wear and damage. Abnormal wear is usually caused by incorrect tire pressure, improper wheel alignment, out-of-balance wheels, severe braking or severe cornering. Look for bumps or bulges in the tread or side of the tire. Replace the tire if you find any of these conditions. Replace the tire if fabric or cord is visible. After rotation, be sure to bring the front and rear tire pressures to specification and check lug nut tightness (proper torque is 79~94 lbf·ft [11~13 kgf·m]).

■ Without a spare tire

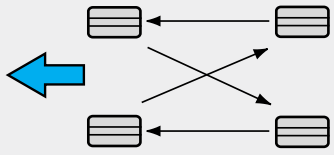

ODH073802

Disc brake pads should be inspected for wear whenever tires are rotated.

Information

Tires that are asymmetrical or directional can only be installed on the wheel in one direction. The outside and inside of an asymmetrical tire is not easily distinguishable. Pay careful attention to the markings on the sidewalls of the tires, noting the "outside" marking and also the rotating direction before installing them on the vehicle.

WARNING

- **Do not use the compact spare tire for tire rotation.**
- **Do not mix bias ply and radial ply tires under any circumstances. This may cause unusual handling characteristics that may cause loss of vehicle control resulting in an accident.**

Wheel Alignment and Tire Balance

The wheels on your vehicle were aligned and balanced carefully at the factory to give you the longest tire life and best overall performance.

In most cases, you will not need to have your wheels aligned again. However, if you notice unusual tire wear or your vehicle pulling one way or the other, the alignment may need to be reset.

If you notice your vehicle vibrating when driving on a smooth road, your wheels may need to be rebalanced.

NOTICE

Improper wheel weights can damage your vehicle's aluminum wheels. Use only approved wheel weights.

Tire Replacement

If the tire is worn evenly, a tread wear indicator will appear as a solid band across the tread. This shows there is less than 2/32 inch (1.6 mm) of tread left on the tire. Replace the tire when this happens.

Do not wait for the tread surface to become level with the tread wear indicators before replacing the tire.

⚠ WARNING

To reduce the risk of DEATH or SERIOUS INJURY:

- **Replace tires that are worn, show uneven wear, or are damaged. Worn tires can cause loss of braking effectiveness, steering control, and traction.**
- **Always replace tires with the same size as each tire that was originally supplied with this vehicle. Using tires and wheels other than the recommended sizes could cause unusual handling characteristics, poor vehicle control, or negatively affect your vehicle's Anti-Lock Brake System (ABS) resulting in a serious accident.**
- **Tires degrade over time, even when they are not being used. Regardless of the remaining tread, HYUNDAI recommends that tires be replaced after six (6) years of normal service.**
- **When replacing tires (or wheels), it is recommended to replace the two front or two rear tires (or wheels) as a pair. Replacing just one tire can seriously affect your vehicle's handling. If only replacing one pair of tires, it is recommended to install the pair of new tires on the rear axle.**
- **Heat caused by hot climates or frequent high loading conditions can accelerate the aging process. Failure to follow this warning may cause sudden tire failure, which could lead to a loss of vehicle control resulting in an accident.**

Compact spare tire replacement

A compact spare tire has a shorter tread life than a regular size tire. Replace it when you can see the tread wear indicator bars on the tire. The replacement compact spare tire should be the same size and design tire as the one provided with your new vehicle and should be mounted on the same compact spare tire wheel. The compact spare tire is not designed to be mounted on a regular size wheel, and the compact spare tire wheel is not designed for mounting a regular size tire.

⚠ WARNING

The original tire should be repaired or replaced as soon as possible to avoid failure of the spare and loss of vehicle control resulting in an accident. The compact spare tire is for emergency use only. Do not operate your vehicle over 50 mph (80 km/h) when using the compact spare tire.

Wheel Replacement

When replacing the metal wheels for any reason, make sure the new wheels are equivalent to the original factory units in diameter, rim width and offset.

Tire Traction

Tire traction can be reduced if you drive on worn tires, tires that are improperly inflated or on slippery road surfaces. Tires should be replaced when the tread depth is at least 2/32 inch (1.6 mm). To reduce the possibility of losing control, slow down whenever there is rain, snow or ice on the road.

Tire Maintenance

In addition to proper inflation, correct wheel alignment helps to decrease tire wear. If you find a tire is worn unevenly, have your dealer check the wheel alignment.

When you have new tires installed, make sure they are balanced. This will increase vehicle ride comfort and tire life. Additionally, a tire should always be rebalanced if it is removed from the wheel.

Tire Sidewall Labeling

This information identifies and describes the fundamental characteristics of the tire and also provides the tire identification number (TIN) for safety standard certification. The TIN can be used to identify the tire in case of a recall.

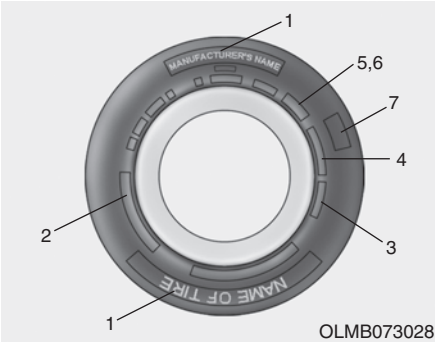

1. Manufacturer or brand name

Manufacturer or brand name is shown.

2. Tire size designation

A tire's sidewall is marked with a tire size designation. You will need this information when selecting replacement tires for your car. The following explains what the letters and numbers in the tire size designation mean.

Example tire size designation:

(These numbers are provided as an example only; your tire size designator could vary depending on your vehicle.)

205/60R16 92H

205 - Tire width in millimeters.

60 - Aspect ratio. The tire's section height as a percentage of its width.

R - Tire construction code (Radial).

16 - Rim diameter in inches.

92 - Load Index, a numerical code associated with the maximum load the tire can carry.

H - Speed Rating Symbol. See the speed rating chart in this section for additional information.

Wheel size designation

Wheels are also marked with important information that you need if you ever have to replace one. The following explains what the letters and numbers in the wheel size designation mean.

Example wheel size designation:

6.5J x 16

6.5 - Rim width in inches.

J - Rim contour designation.

16 - Rim diameter in inches.

Tire speed ratings

The chart below lists many of the different speed ratings currently being used for passenger vehicle tires. The speed rating is part of the tire size designation on the sidewall of the tire. This symbol corresponds to that tire's designed maximum safe operating speed.

Speed Rating Symbol	Maximum Speed
S	112 mph (180 km/h)
T	118 mph (190 km/h)
H	130 mph (210 km/h)
V	149 mph (240 km/h)
W	168 mph (270 km/h)
Y	186 mph (300 km/h)

3. Checking tire life (TIN : Tire Identification Number)

Any tires that are over six years old, based on the manufacturing date, (including the spare tire) should be replaced by new ones. You can find the manufacturing date on the tire sidewall (possibly on the inside of the wheel), displaying the DOT Code. The DOT Code is a series of numbers on a tire consisting of numbers and English letters. The manufacturing date is designated by the last four digits (characters) of the DOT code.

DOT : XXXX XXXX OOOO

The front part of the DOT shows a plant code number, tire size and tread pattern and the last four numbers indicate week and year manufactured.

For example:

DOT XXXX XXXX 1418 represents that the tire was produced in the 14th week of 2018.

4. Tire ply composition and material

The number of layers or plies of rubber-coated fabric in the tire. Tire manufacturers also must indicate the materials in the tire, which include steel, nylon, polyester, and others. The letter "R" means radial ply construction; the letter "D" means diagonal or bias ply construction; and the letter "B" means belted-bias ply construction.

5. Maximum permissible inflation pressure

This number is the greatest amount of air pressure that should be put in the tire. Do not exceed the maximum permissible inflation pressure. Refer to the Tire and Loading Information label for recommended inflation pressure.

6. Maximum load rating

This number indicates the maximum load in kilograms and pounds that can be carried by the tire. When replacing the tires on the vehicle, always use a tire that has the same load rating as the factory installed tire.

7. Uniform tire quality grading

Quality grades can be found where applicable on the tire sidewall between tread shoulder and maximum section width.

For example:

TREAD WEAR 200

TRACTION AA

TEMPERATURE A

Tread wear

The tread wear grade is a comparative rating based on the wear rate of the tire when tested under controlled conditions on a specified government test course. For example, a tire graded 150 would wear one-and-a-half times (1½) as well on the government course as a tire graded 100.

The relative performance of tires depends upon the actual conditions of their use, however, and may depart significantly from the norm due to variations in driving habits, service practices and differences in road characteristics and climate.

These grades are molded on the sidewalls of passenger vehicle tires. The tires available as standard or optional equipment on your vehicle may vary with respect to grade.

Traction - AA, A, B & C

The traction grades, from highest to lowest, are AA, A, B and C. Those grades represent the tire's ability to stop on wet pavement as measured under controlled conditions on specified government test surfaces of asphalt and concrete. A tire marked C may have poor traction performance.

⚠ WARNING

The traction grade assigned to this tire is based on straight-ahead braking traction tests, and does not include acceleration, cornering, hydroplaning, or peak traction characteristics.

Temperature - A, B & C

The temperature grades are A (the highest), B and C representing the tire's resistance to the generation of heat and its ability to dissipate heat when tested under controlled conditions on a specified indoor laboratory test wheel.

Sustained high temperature can cause the material of the tire to degenerate and reduce tire life, and excessive temperature can lead to sudden tire failure. Grade C responds to a level of performance which all passenger car tires must meet under the Federal Motor Vehicle Safety Standard No. 109. Grades B and A represent higher levels of performance on the laboratory test wheel than the minimum required by law.

⚠ WARNING

The temperature grade for this tire is established for a tire that is properly inflated and not overloaded. Excessive speed, under-inflation, over-inflation, or excessive loading, either separately or in combination, can cause heat build-up and possible sudden tire failure. This may cause loss of vehicle control resulting in an accident.

Tire Terminology and Definitions

Air Pressure

The amount of air inside the tire pressing outward on the tire. Air pressure is expressed in pounds per square inch (psi) or kilopascal (kPa).

Accessory Weight

This means the combined weight of optional accessories. Some examples of optional accessories are automatic transmission, power seats, and air conditioning.

Aspect Ratio

The relationship of a tire's height to its width.

Belt

A rubber coated layer of cords that is located between the plies and the tread. Cords may be made from steel or other reinforcing materials.

Bead

The tire bead contains steel wires wrapped by steel cords that hold the tire onto the rim.

Bias Ply Tire

A pneumatic tire in which the plies are laid at alternate angles less than 90 degrees to the centerline of the tread.

Cold Tire Pressure

The amount of air pressure in a tire, measured in pounds per square inch (psi) or kilopascals (kPa) before a tire has built up heat from driving.

Curb Weight

This means the weight of a motor vehicle with standard and optional equipment including the maximum capacity of fuel, oil and coolant, but without passengers and cargo.

DOT Markings

A code molded into the sidewall of a tire signifying that the tire is in compliance with the U.S. Department of Transportation motor vehicle safety standards. The DOT code includes the Tire Identification Number (TIN), an alphanumeric designator which can also identify the tire manufacturer, production plant, brand and date of production.

GVWR

Gross Vehicle Weight Rating

GAWR FRT

Gross Axle Weight Rating for the Front Axle.

GAWR RR

Gross Axle Weight Rating for the Rear axle.

Intended Outboard Sidewall

The side of an asymmetrical tire, that must always face outward when mounted on a vehicle.

Kilopascal (kPa)

The metric unit for air pressure.

Light truck(LT) tire

A tire designated by its manufacturer as primarily intended for use on lightweight trucks or multipurpose passenger vehicles.

Load ratings

The maximum load that a tire is rated to carry for a given inflation pressure.

Load Index

An assigned number ranging from 1 to 279 that corresponds to the load carrying capacity of a tire.

Maximum Inflation Pressure

The maximum air pressure to which a cold tire may be inflated. The maximum air pressure is molded onto the sidewall.

Maximum Load Rating

The load rating for a tire at the maximum permissible inflation pressure for that tire.

Maximum Loaded Vehicle Weight

The sum of curb weight; accessory weight; vehicle capacity weight; and production options weight.

Normal Occupant Weight

The number of occupants a vehicle is designed to seat multiplied by 150 pounds (68 kg).

Occupant Distribution

Designated seating positions.

Outward Facing Sidewall

An asymmetrical tire has a particular side that faces outward when mounted on a vehicle. The outward facing sidewall bears white lettering or bears manufacturer, brand, and/or model name molding that is higher or deeper than the same moldings on the inner facing sidewall.

Passenger (P-Metric) tire

A tire used on passenger cars and some light duty trucks and multipurpose vehicles.

Ply

A layer of rubber-coated parallel cords.

Pneumatic tire

A mechanical device made of rubber, chemicals, fabric and steel or other materials, that, when mounted on an automotive wheel provides the traction and contains the gas or fluid that sustains the load.

Pneumatic options weight

The combined weight of installed regular production options weighing over 5 lb. (2.3 kg) in excess of the standard items which they replace, not previously considered in curb weight or accessory weight, including heavy duty breaks, ride levelers, roof rack, heavy duty battery, and special trim.

Recommended Inflation Pressure

Vehicle manufacturer's recommended tire inflation pressure as shown on the tire placard.

Radial Ply Tire

A pneumatic tire in which the ply cords that extend to the beads are laid at 90 degrees to the centerline of the tread.

Rim

A metal support for a tire and upon which the tire beads are seated.

Sidewall

The portion of a tire between the tread and the bead.

Speed Rating

An alphanumeric code assigned to a tire indicating the maximum speed at which a tire can operate.

Traction

The friction between the tire and the road surface. The amount of grip provided.

Tread

The portion of a tire that comes into contact with the road.

Treadwear Indicators

Narrow bands, sometimes called "wear bars", that show across the tread of a tire when only 1/16 inch of tread remains.

UTQGS

Uniform Tire Quality Grading Standards is a tire information system that provides consumers with ratings for a tire's traction, temperature and treadwear. Ratings are determined by tire manufacturers using government testing procedures. The ratings are molded into the sidewall of the tire.

Vehicle Capacity Weight

The number of designated seating positions multiplied by 150 lbs. (68 kg) plus the rated cargo and luggage load.

Vehicle Maximum Load on the Tire

Load on an individual tire due to curb and accessory weight plus maximum occupant and cargo weight.

Vehicle Normal Load on the Tire

Load on an individual tire that is determined by distributing to each axle its share of the curb weight, accessory weight, and normal occupant weight and dividing by 2.

Vehicle Placard

A label permanently attached to a vehicle showing the original equipment tire size and recommended inflation pressure.

All Season Tires

HYUNDAI specifies all season tires on some models to provide good performance for use all year round, including snowy and icy road conditions. All season tires are identified by ALL SEASON and/or M+S (Mud and Snow) on the tire sidewall. Snow tires have better snow traction than all season tires and may be more appropriate in some areas.

Summer Tires

HYUNDAI specifies summer tires on some models to provide superior performance on dry roads. Summer tire performance is substantially reduced in snow and ice. Summer tires do not have the tire traction rating M+S (Mud and Snow) on the tire side wall. If you plan to operate your vehicle in snowy or icy conditions, HYUNDAI recommends the use of snow tires or all season tires on all four wheels.

Snow Tires

If you equip your car with snow tires, they should be the same size and have the same load capacity as the original tires. Snow tires should be installed on all four wheels; otherwise, poor handling may result. Snow tires should carry 4 psi (28 kPa) more air pressure than the pressure recommended for the standard tires on the tire label on the driver's side of the center pillar, or up to the maximum pressure shown on the tire sidewall, whichever is less. Do not drive faster than 75 mph (120 km/h) when your vehicle is equipped with snow tires.

Radial-Ply Tires

Radial-ply tires provide improved tread life, road hazard resistance and smoother high speed ride. The radial-ply tires used on this vehicle are of belted construction, and are selected to complement the ride and handling characteristics of your vehicle.

Radial-ply tires have the same load carrying capacity, as bias-ply or bias belted tires of the same size, and use the same recommended inflation pressure. Mixing of radial-ply tires with bias-ply or bias belted tires is not recommended. Any combinations of radial-ply and bias-ply or bias belted tires when used on the same vehicle will seriously deteriorate vehicle handling. The best rule to follow is: Identical pairs of radial-ply tires should always be used as a set for the front tires and a set for the rear tires.

Longer wearing tires can be more susceptible to irregular tread wear. It is very important to follow the tire rotation interval in this chapter to achieve the tread life potential of these tires. Cuts and punctures in radial-ply tires are repairable only in the tread area, because of sidewall flexing. Consult your tire dealer for radial-ply tire repairs.

⚠ WARNING

Do not mix bias ply and radial ply tires under any circumstances. This may cause unusual handling characteristics that may cause loss of vehicle control resulting in an accident.

Low Aspect Ratio Tires

The aspect ratio is lower than 50 on low aspect ratio tires.

Because low aspect ratio tires are optimized for handling and braking, their sidewall is a little stiffer than a standard tire. Also low aspect ratio tires tend to be wider and consequently have a greater contact patch with the road surface. In some instances they may generate more road noise compared with standard tires.

⚠ CAUTION

Because the sidewall of a low aspect ratio tire is shorter than a standard tire, the rim of the wheel and the tire itself is more easily susceptible to damage. Use caution when driving and follow the guidelines below to help minimize damage to the wheel and tire:

- **When driving on a rough road or off road, drive cautiously because tires and wheels may be damaged. And after driving, inspect tires and wheels.**
- **When passing over a pothole, speed bump, manhole, or curb stone, drive slowly so that the tires and wheels are not damaged.**
- **If the tire is subjected to a severe impact, have the tire and wheel inspected by an authorized HYUNDAI dealer.**
- **Inspect the tire condition and pressure every 1,800 miles (3,000km).**

⚠ CAUTION

- **It is not easy to recognize tire damage with your own eyes. But if there is the slightest hint of tire damage, have the tire checked or replaced because the tire damage may cause air leakage from the tire.**
- **If the tire is damaged by driving on a rough road, off road, pothole, manhole, or curb stone, it will not be covered by the warranty.**

FUSES

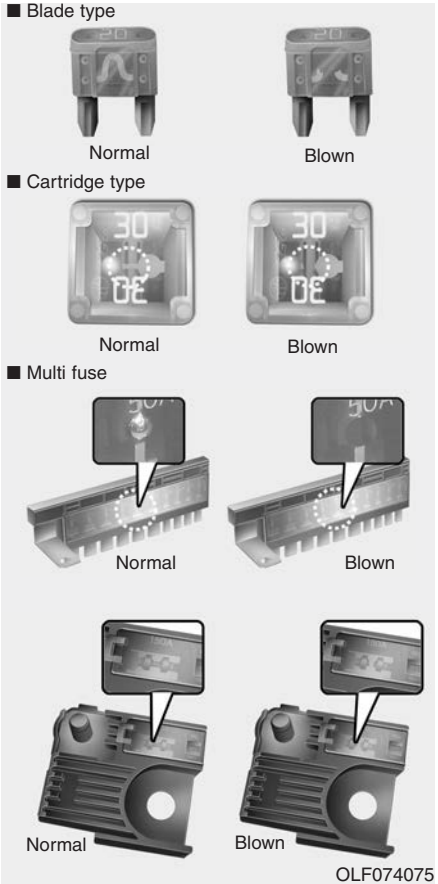

A vehicle's electrical system is protected from electrical overload damage by fuses.

This vehicle has 2 (or 3) fuse panels, one located in the driver's side panel bolster, the other in the engine compartment near the battery.

If any of your vehicle's lights, accessories, or controls do not work, check the appropriate circuit fuse. If a fuse has blown, the element inside the fuse will be melted or broken.

If the electrical system does not work, first check the driver's side fuse panel. Before replacing a blown fuse, turn the engine and all switches off, and then disconnect the negative battery cable. Always replace a blown fuse with one of the same rating.

If the replacement fuse blows, this indicates an electrical problem. Avoid using the system involved and immediately consult an authorized HYUNDAI dealer.

⚠ WARNING

NEVER replace a fuse with anything but another fuse of the same rating.

- **A higher capacity fuse could cause damage and possibly cause a fire.**
- **Do not install a wire or aluminum foil instead of the proper fuse - even as a temporary repair. It may cause extensive wiring damage and possibly a fire.**

NOTICE

Do not use a screwdriver or any other metal object to remove fuses because it may cause a short circuit and damage the system.

Instrument Panel Fuse Replacement

OOS077028

1. Turn the engine off.
2. Turn all other switches OFF.
3. Open the fuse panel cover.
4. Refer to the label on the inside of the fuse panel cover to locate the suspected fuse location.

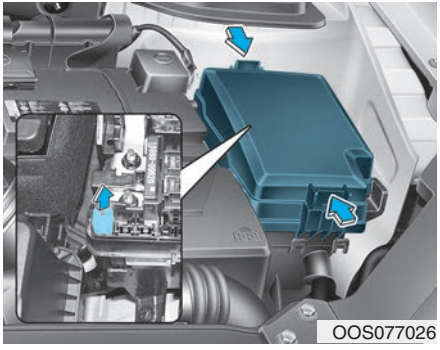
OOS077026

5. Pull the suspected fuse straight out. Use the removal tool provided in the engine compartment fuse panel.
6. Check the removed fuse; replace it if it is blown. Spare fuses are provided in the instrument panel fuse panels (or in the engine compartment fuse panel).
7. Push in a new fuse of the same rating, and make sure it fits tightly in the clips. If it fits loosely, consult an authorized HYUNDAI dealer.

In an emergency, if you do not have a spare fuse, use a fuse of the same rating from a circuit you may not need for operating the vehicle.

If the headlamps or other electrical components do not work and the fuses are undamaged, check the fuse panel in the engine compartment. If a fuse is blown, it must be replaced with the same rating.

Fuse switch

OOS077027

Always, place the fuse switch to the ON position.

If you move the switch to the OFF position, some items such as the audio system and digital clock must be reset and the smart key may not work properly.

Information

OOS047142L

If the fuse switch is OFF, the above message will appear.

NOTICE

- **Always place the fuse switch in the ON position while driving the vehicle.**
- **Do not move the fuse switch repeatedly. The fuse switch may be damaged.**

Engine Compartment Panel Fuse Replacement

■ Blade type fuse

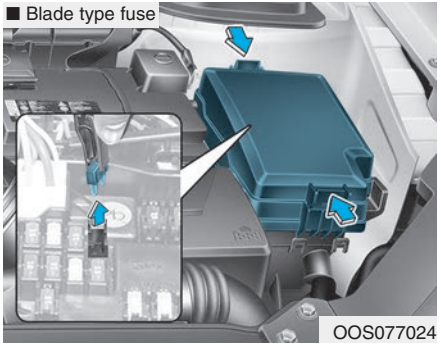
OOS077024

■ Cartridge type fuse

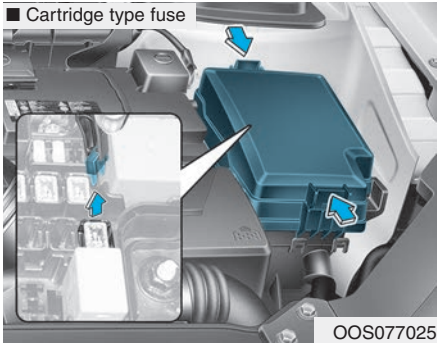
OOS077025

1. Turn the engine off.
2. Turn all other switches OFF.

3. Remove the fuse panel cover by pressing the tap and pulling up.
4. Check the removed fuse; replace it if it is blown. To remove or insert the fuse, use the fuse puller in the engine compartment fuse panel.
5. Push in a new fuse of the same rating, and make sure it fits tightly in the clips. If it fits loosely, consult an authorized HYUNDAI dealer.

⚠ CAUTION

After checking the fuse box in the engine compartment securely close the fuse box cover inside the engine compartment, until it clicks.

If the fuse box is not closed properly, water may leak in side, possibly causing a malfunction with the electrical system.

Main fuse

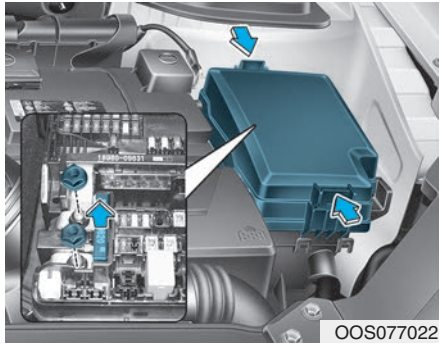
OOS077022

If the main fuse is blown, it must be removed as follows:

1. Turn off the engine.
2. Disconnect the negative battery cable.
3. Remove the fuse panel cover by pressing the tab and pulling it up.
4. Remove the nuts shown in the picture above.
5. Replace the fuse with a new one of the same rating.
6. Reinstall in the reverse order of removal.

Information

If the main fuse is blown, consult an authorized HYUNDAI dealer.

Multi fuse

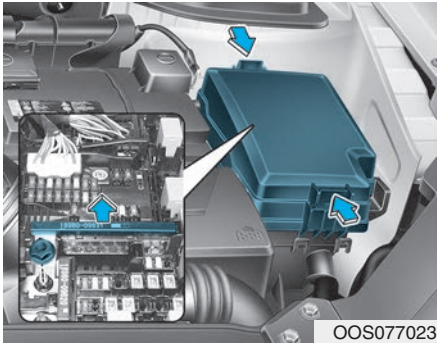
OOS077023

If the multi fuse is blown, it must be removed as follows:

1. Turn off the engine.
2. Disconnect the negative battery cable.
3. Remove the fuse panel cover by pressing the tab and pulling it up.
4. Remove the nuts shown in the picture above.
5. Replace the fuse with a new one of the same rating.
6. Reinstall in the reverse order of removal.

Information

If the multi fuse is blown, consult an authorized HYUNDAI dealer.

Fuse/Relay Panel Description

Instrument panel fuse panel

OOS077028

Inside the fuse/relay box cover, you can find the fuse/relay label describing fuse/relay names and ratings.

Information

Not all fuse panel descriptions in this manual may be applicable to your vehicle; the information is accurate at the time of printing. When you inspect the fuse box on your vehicle, refer to the fuse box label.

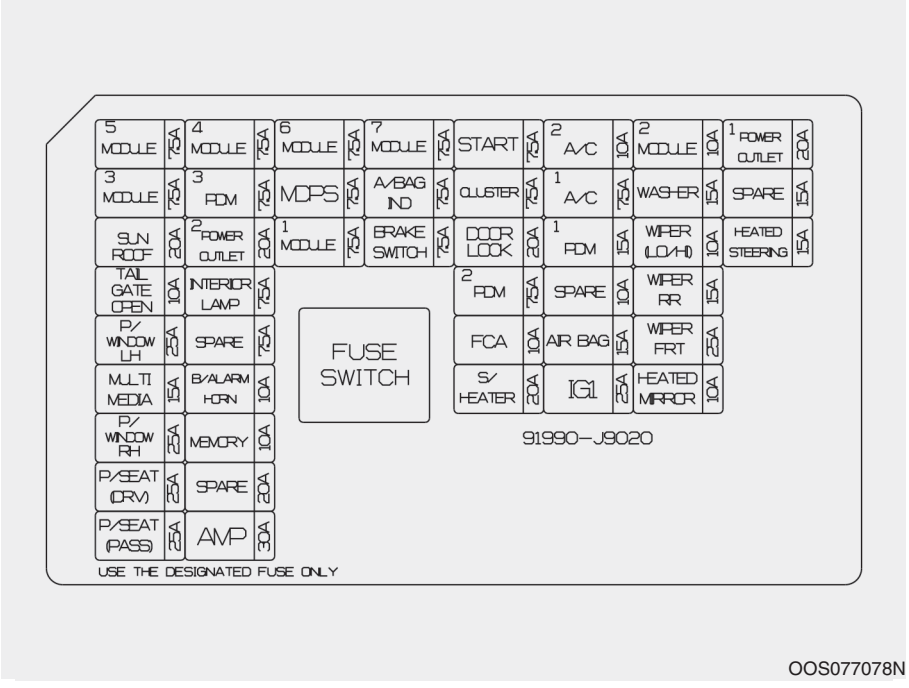

OOS077078N

Instrument panel fuse panel

Fuse Name	Fuse Rating	Protected Component
MODULE 5	7.5A	ATM Shift Lever IND., Electro Chromic Mirror, AMP, A/V & Navigation Head Unit, A/C Control Module, Front Air Ventilation Seat Module, Front Seat Warmer Module
MODULE 3	7.5A	Stop Lamp Switch, BCM, ATM Shift Lever
SUNROOF	20A	Sunroof Unit
TAIL GATE OPEN	10A	Tail Gate Relay
P/WINDOW LH	25A	Power Window LH Relay, Driver Safety Power Window Module
MULTI MEDIA	15A	A/V & Navigation Head Unit
P/WINDOW RH	25A	Power Window RH Relay, Passenger Safety Power Window Module
P/SEAT (DRV)	25A	Driver Seat Manual Switch
P/SEAT (PASS)	25A	Passenger Seat Manual Switch
MODULE 4	7.5A	Blind-Spot Collision Warning Unit LH/RH, Active Air Flap, BCM, Parking Distance Warning Buzzer, Lane Keeping Assist Unit (Line), 4WD ECM
PDM3	7.5A	Smart Key Control Module, Immobilizer Module
POWER OUTLET 2	20A	ICM Relay Box(Power Outlet Relay)

Instrument panel fuse panel

Fuse Name	Fuse Rating	Protected Component
INTERIOR LAMP	7.5A	Glove Box Lamp, Vanity Lamp LH/RH, Room Lamp, Overhead Console Lamp, Wiresess Charger Unit, Driver Console Switch, Luggage Lamp
B/ALARM HORN	10A	ICM Relay Box(Burglar Alarm Horn Relay)
MEMORY	10A	A/C Control Module, Head Up Display, Instrument Cluster, Electro Chromic Mirror
AMP	30A	AMP
MODULE 6	7.5A	Smart Key Control Module, BCM
MDPS	7.5A	MDPS Unit
MODULE 1	7.5A	Active Air Flap, Ignition key Interlock Switch, BCM, Hazard Switch, Data Link Connector, Rain sensor
MODULE 7	7.5A	Front Air Ventilation Seat Module, Front Seat Warmer Module
A/BAG IND	7.5A	Instrument Cluster, A/C Control Modulee
BRAKE SWITCH	7.5A	Stop Lamp Switch, Smart Key Control Module
START	7.5A	Transaxle Range Switch(A/T), ECM, ICM Relay Box(Burglar Alarm Relay)
CLUSTER	7.5A	Head Up Display, Instrument Cluster

Instrument panel fuse panel

Fuse Name	Fuse Rating	Protected Component
DOOR LOCK	20A	Door Lock Relay, Door Unlock Relay, ICM Relay Box(Two Turn Unlock Relay)
PDM 2	7.5A	Start/Stop Button Switch, Immobilizer Module
FCA	10A	Forward Collision Avoidance Assist Unit
S/HEATER	20A	Front Seat Warmer Module, Front Air Ventilation Seat Module
A/C 2	20A	A/C Control Module, Blower Motor, Blower Resistor, E/R Junction Block (Blower Relay)
A/C 1	7.5A	A/C Control Module, E/R Junction Block(PTC Heater #2 Relay, Blower Relay, PTC Heater #1 Relay)
PDM 1	15A	Smart Key Control Module
AIR BAG	15A	SRS Control Module, Passenger Occupant Detection Sensor
IG1	25A	PCB Block(FUSE : ABS 3, ECU 5, SENSOR 4, TCU 2)
MODULE2	10A	Wiresess Charger Unit, Smart Key Control Module, BCM, A/V & Navigation Head Unit, ICM Relay Box(Power Outlet Relay), Power Outside Mirror Switch, AMP
WASHER	15A	Muntifunction Switch
WIPER (LO/HI)	10A	BCM, PCB Block (Front Wiper (Low) Relay), Front Wiper Motor

Instrument panel fuse panel

Fuse Name	Fuse Rating	Protected Component
WIPER RR	15A	Rear Wiper Relay, Rear Wiper Motor
WIPER FRT	25A	Front Wiper Motor, PCB Block(Front Wiper(Low) Relay)
HEATED MIRROR	10A	Driver/Passenger Power Outside Mirror, A/C Control Module, ECM
POWER OUTLET 1	20A	Cigarette Lighter
HEATED STEERING	15A	BCM

Engine compartment fuse panel

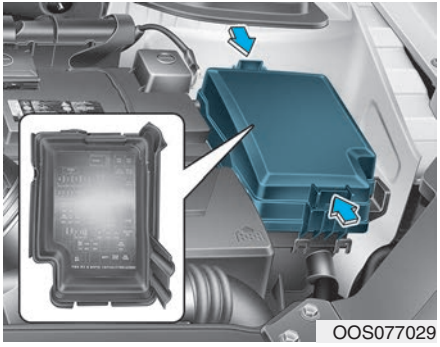
OOS077029

Inside the fuse/relay box cover, you can find the fuse/relay label describing fuse/relay names and ratings.

Information

Not all fuse panel descriptions in this manual may be applicable to your vehicle; the information is accurate at the time of printing. When you inspect the fuse panel in your vehicle, refer to the fuse panel label.

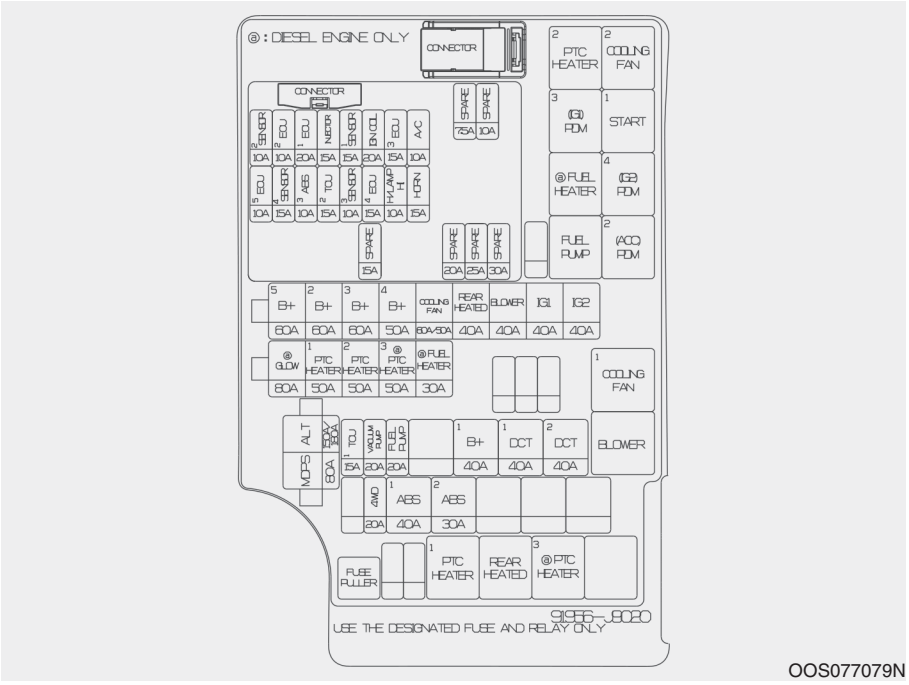

OOS077079N

Engine compartment fuse panel

Fuse Name	Fuse Rating	Protected Component
ALT	150A	E/R Junction Block (Fuse - ABS 1, ABS 2, 4WD), Alternator
MDPS	80A	MDPS Unit
B+5	60A	PCB Block ((Fuse - HORN, H/LAMP HI, A/C, ECU 4, ECU 3), Engine Control Relay)
B+2	60A	IGPM ((Fuse - S/HEATER), IPS0, IPS1, IPS2)
B+3	60A	IGPM (IPS3, IPS4, IPS5, IPS6, IPS7, IPS8)
B+4	50A	IGPM (Fuse - P/WINDOW LH, P/WINDOW RH, TAIL GATE OPEN, SUNROOF, B/ALARM HORN, POWER OUTLET 2, AMP, P/SEAT (PASS),P/SEAT (DRV))
COOLING FAN	60A/50A	E/R Junction Block (Cooling Fan #2 Relay, Cooling Fan #1 Relay)
REAR HEATED	40A	E/R Junction Block (Rear Defogger Relay)
BLOWER	40A	E/R Junction Block (Blower Relay)
IG1	40A	W/O Smark Key : Ignition Switch With Smark Key : E/R Junction Block (PDM #3 (IG1) Relay, PDM #2 (ACC) Relay)
IG2	40A	W/O Smark Key : Ignition Switch, E/R Junction Block (Srart #1 Relay) With Smark Key : E/R Junction Block (PDM #4 (IG2) Relay, Srart #1 Relay)
PTC HEATER 1	50A	E/R Junction Block (PTC Heater #1 Relay)
PTC HEATER 2	50A	E/R Junction Block (PTC Heater #2 Relay)

Engine compartment fuse panel

Fuse Name	Fuse Rating	Protected Component
TCU 1	15A	TCM
VACUUM PUMP	20A	Vacuum Pump
FUEL PUMP	20A	E/R Junction Block (Fuel Pump Relay)
B+1	40A	IGPM ((Fuse - BRAKE SWITCH, PDM 1, DOOR LOCK, MODULE 1, PDM 2), Leak Current Autocut Device)
DCT1	40A	TCM
DCT2	40A	TCM
4WD	20A	4WD ECM
ABS 1	40A	ESC Control Module, Multipurpose Check Connector
ABS 2	30A	ESC Control Module

Engine compartment fuse panel

■ GAMMA 1.6L T-GDI

Fuse Name	Fuse Rating	Protected Component
SENSOR 2	10A	PCB Block (A/CON Relay), E/R Junction Block (Cooling Fan #1 Relay), Purge Control Solenoid Valve, RCV Control Solenoid Valve, Oil Control Valve #1~#2, Canister Close Valve
ECU 2	10A	ECM
ECU 1	20A	ECM
INJECTOR	15A	-
SENSOR 1	15A	Oxygen Sensor (Up), Oxygen Sensor (Down)
IGN COIL	20A	Ignition Coil #1~#4
ECU 3	15A	ECM
A/C	10A	PCB Block (A/CON Relay)
ECU 5	10A	ECM
SENSOR 4	15A	Vacuum Pump
ABS 3	10A	ESC Control Module, Multipurpose Check Connector
TCU 2	15A	TCM, Transaxle Range Switch
SENSOR 3	10A	E/R Junction Block (Fuel Pump Relay)
ECU 4	15A	ECM

Fuse Name	Fuse Rating	Protected Component
H/LAMP HI	10A	PCB Block (Head Lamp(High) Relay)
HORN	15A	PCB Block (Horn Relay)

Engine compartment fuse panel

■ NU 2.0L MPI

Fuse Name	Fuse Rating	Protected Component
SENSOR 2	10A	PCB Block (A/CON Relay), E/R Junction Block (Cooling Fan #2 Relay, Cooling Fan #1 Relay), Purge Control Solenoid Valve, Electronic Thermostat, Variable Intake Solenoid Valve, Oil Control Valve #1~#3, Canister Close Valve
ECU 2	10A	-
ECU 1	20A	PCM
INJECTOR	15A	Injector #1~#4
SENSOR 1	15A	Oxygen Sensor (Up), Oxygen Sensor (Down)
IGN COIL	20A	Ignition Coil #1~#4
ECU 3	15A	PCM

Fuse Name	Fuse Rating	Protected Component
A/C	10A	PCB Block (A/CON Relay)
ECU 5	10A	PCM
SENSOR 4	15A	-
ABS 3	10A	Multipurpose Check Connector, ESC Control Module
TCU 2	15A	Transaxle Range Switch
SENSOR 3	10A	E/R Junction Block (Fuel Pump Relay)
ECU 4	15A	PCM
H/LAMP HI	10A	PCB Block (Head Lamp(High) Relay)
HORN	15A	PCB Block (Horn Relay)

Engine compartment fuse panel (Battery terminal cover)

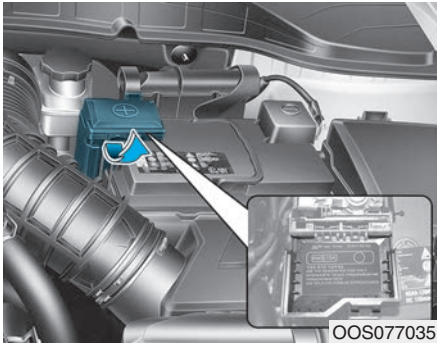

Inside the fuse/relay box cover, you can find the fuse/relay label describing fuse/relay names and ratings.

Information

Not all fuse panel descriptions in this manual may be applicable to your vehicle; the information is accurate at the time of printing. When you inspect the fuse panel in your vehicle, refer to the fuse panel label.

NOTICE

After checking the fuse panel in the engine compartment, securely install the cover. If it is not securely latched, electrical failure may occur from water contact.

LIGHT BULBS

Consult an authorized HYUNDAI dealer to replace most vehicle light bulbs. It is difficult to replace vehicle light bulbs because other parts of the vehicle must be removed before you can get to the bulb. This is especially true for removing the headlamp assembly to get to the bulb(s).

Removing/installing the headlamp assembly can result in damage to the vehicle.

Information

After heavy driving, rain or washing, headlamp and trunk lenses could appear frosty. This condition is caused by the temperature difference between the lamp inside and the outside temperature. This is similar to the condensation on your windows inside your vehicle during the rain and doesn't indicate a problem with your vehicle. If the water leaks into the lamp bulb circuitry, have your vehicle checked by an authorized HYUNDAI dealer.

⚠ WARNING

- **Prior to replacing a lamp, depress the foot brake, move the shift lever into P (Park) apply the parking brake, place the ignition switch to the LOCK/OFF position, and take the key with you when leaving the vehicle to avoid sudden movement of the vehicle and to prevent possible electric shock.**
- **Be aware the bulbs may be hot and may burn your fingers.**

Headlamp, Position lamp, Daytime Running Light, Turn signal lamp, Cornering lamp and Side marker

Type A

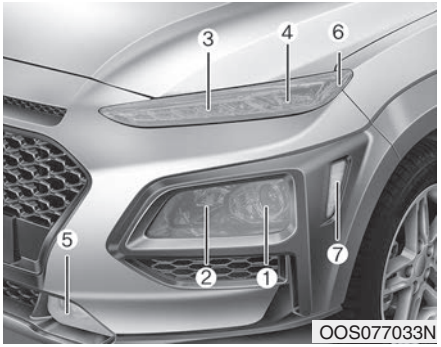

(1) Headlamp (Low)
(2) Headlamp (High)
(3) Daytime running light (if equipped) /Position lamp
(4) Turn signal lamp
(5) Front fog lamp (if equipped)
(6) Side marker
(7) Side reflex reflector

⚠ WARNING

- **Handle halogen bulbs with care. Halogen bulbs contain pressurized gas that will produce flying pieces of glass that could cause injuries if broken.**
- **Wear eye protection when changing a bulb. Allow the bulb to cool down before handling it.**

- Always handle them carefully, and avoid scratches and abrasions. If the bulbs are lit, avoid contact with liquids.
- Never touch the glass with bare hands. Residual oil may cause the bulb to overheat and burst when lit.
- A bulb should be operated only when installed in a headlamp.
- If a bulb becomes damaged or cracked, replace it immediately and carefully dispose of it.

■ High/Low beam

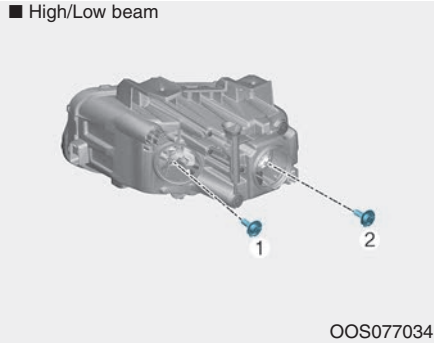

[1] : High beam, [2] : Low beam

1. Open the hood.
2. Disconnect the negative battery cable.
3. Remove the headlamp bulb cover by turning it counterclockwise.
4. Disconnect the headlamp bulb socket-connector.

5. Remove the bulb from the headlamp assembly.
6. Install a new headlamp bulb and snap the headlamp bulb retaining wire into position by aligning the wire with the groove on the bulb.
7. Connect the headlamp bulb socket-connector.
8. Install the headlamp bulb cover by turning it clockwise.

Information

The headlamp aiming should be adjusted after an accident or after the headlamp assembly is reinstalled at an authorized HYUNDAI dealer.

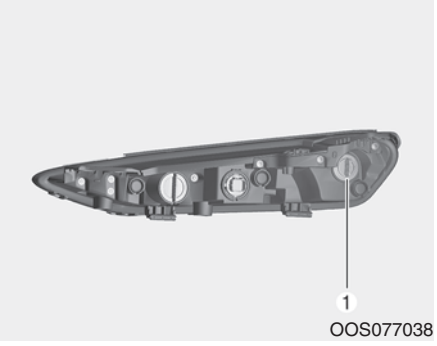

Turn signal

1. Open the hood.
2. Disconnect the negative battery cable.
3. Remove the socket (1) from the assembly by turning the socket counterclockwise until the tabs on the socket align with the slots on the assembly.
4. Remove the bulb from the socket by pressing it in and rotating it counterclockwise until the tabs on the bulb align with the slots in the socket. Pull the bulb out of the socket.
5. Install a new bulb by inserting it into the socket and rotating it until it locks into place.
6. Install the socket in the assembly by aligning the tabs on the socket with the slots in the assembly.
7. Push the socket into the assembly and turn the socket clockwise.

Position lamp and daytime running light

Your vehicle is equipped with LED lamps. LED lamps do not have replaceable bulbs. If the LED lamp does not operate, have the vehicle checked by an authorized HYUNDAI dealer.

Side marker

If the light bulb does not operate, have the vehicle checked by an authorized HYUNDAI dealer.

Type B

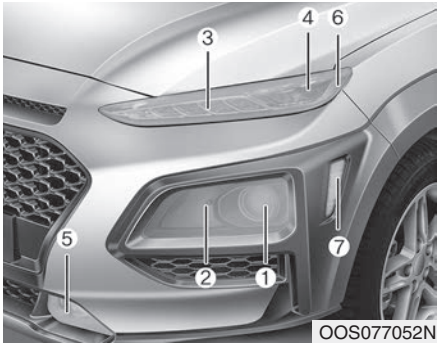

OOS077052N

(1) Headlamp (Low/High)
(2) Cornering light
(3) Daytime running light (if equipped) /Position lamp
(4) Turn signal lamp
(5) Front fog lamp (if equipped)
(6) Side marker
(7) Side reflex reflector

⚠ WARNING

OLMB073042L

- **Handle halogen bulbs with care. Halogen bulbs contain pressurized gas that will produce flying pieces of glass that could cause injuries if broken.**
- **Wear eye protection when changing a bulb. Allow the bulb to cool down before handling it.**

- Always handle them carefully, and avoid scratches and abrasions. If the bulbs are lit, avoid contact with liquids.
- Never touch the glass with bare hands. Residual oil may cause the bulb to overheat and burst when lit.
- A bulb should be operated only when installed in a headlamp.
- If a bulb becomes damaged or cracked, replace it immediately and carefully dispose of it.

Headlamp

Your vehicle is equipped with LED lamps. LED lamps do not have replaceable bulbs. If the LED lamp does not operate, have the vehicle checked by an authorized HYUNDAI dealer.

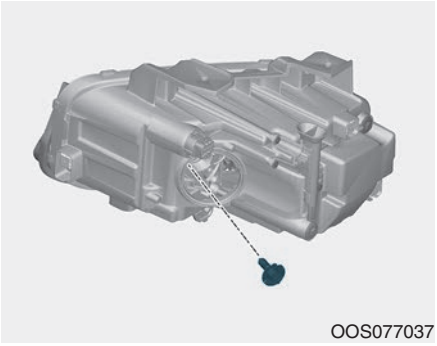

OOS077037

Cornering Lamp

1. Open the hood.
2. Disconnect the negative battery cable.
3. Remove the socket from the assembly by turning the socket counterclockwise until the tabs on the socket align with the slots on the assembly.
4. Remove the bulb from the socket by pressing it in and rotating it counterclockwise until the tabs on the bulb align with the slots in the socket.

   Pull the bulb out of the socket.
5. Insert a new bulb by inserting it into the socket and rotating it until it locks into place.
6. Install the socket in the assembly by aligning the tabs on the socket with the slots in the assembly.
7. Push the socket into the assembly and turn the socket clockwise.

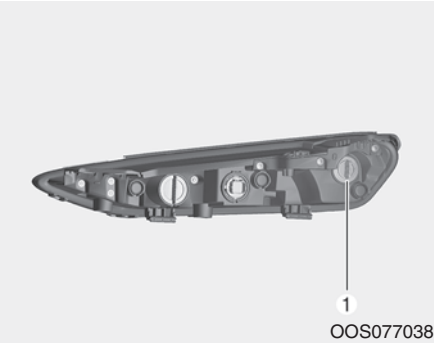

OOS077038

Turn signal

1. Open the hood.
2. Disconnect the negative battery cable.
3. Remove the socket (1) from the assembly by turning the socket counterclockwise until the tabs on the socket align with the slots on the assembly.
4. Remove the bulb from the socket by pressing it in and rotating it counterclockwise until the tabs on the bulb align with the slots in the socket. Pull the bulb out of the socket.

5. Install a new bulb by inserting it into the socket and rotating it until it locks into place.
6. Install the socket in the assembly by aligning the tabs on the socket with the slots in the assembly.
7. Push the socket into the assembly and turn the socket clockwise.

Position lamp and daytime running light

Your vehicle is equipped with LED lamps. LED lamps do not have replaceable bulbs. If the LED lamp does not operate, have the vehicle checked by an authorized HYUNDAI dealer.

Side marker

If the light bulb does not operate, have the vehicle checked by an authorized HYUNDAI dealer.

Front fog lamp (if equipped)

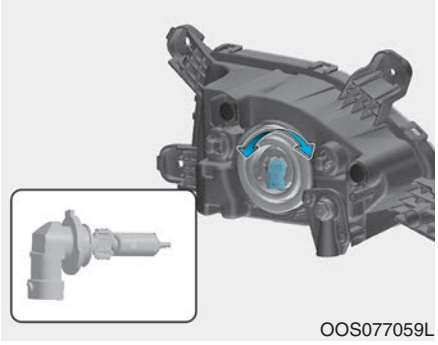

1. Loosen the pin-type retainers of the under cover and then remove the undercover.
2. Reach your hand into the back of the front bumper.
3. Disconnect the power connector from the socket.
4. Remove the bulb-socket from the housing by turning the socket counterclockwise until the tabs on the socket align with the slots of the housing.
5. Install a new bulb-socket into the housing by aligning the tabs on the socket with the slots in the housing. Push the socket into the housing and turn the socket clockwise.

Side Repeater Lamp Replacement

If the light bulb does not operate, have the vehicle checked by an authorized HYUNDAI dealer.

Rear Combination Light Bulb Replacement

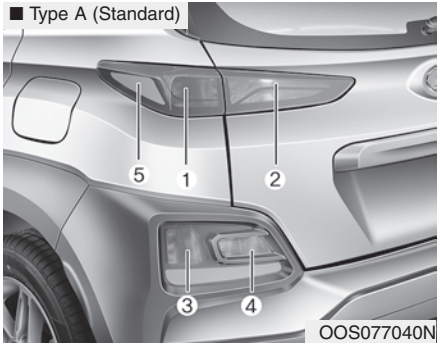

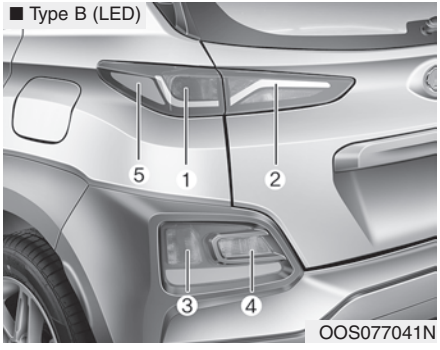

(1) Stop/Tail lamp
(2) Tail lamp (Type A),
Stop/Tail lamp (Type B)
(3) Turn signal lamp
(4) Backup lamp
(5) Side marker

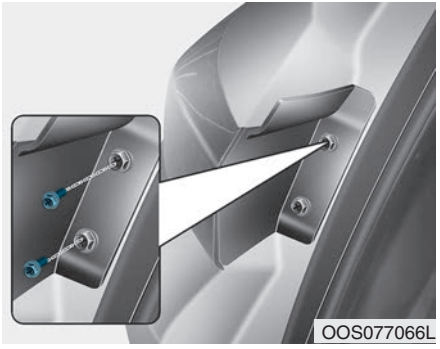

Stop/Tail lamp

1. Open the liftgate.
2. Open the lamp assembly retaining screw covers.
3. Loosen the lamp assembly retaining screws with a cross-tip screwdriver.

4. Remove the rear combination lamp assembly from the body of the vehicle.
5. Remove the socket from the assembly by turning the socket counterclockwise until the tabs on the socket align with the slots on the assembly.
6. Remove the bulb from the socket by pressing it in and rotating it counterclockwise until the tabs on the bulb align with the slots in the socket. Pull the bulb out of the socket.
7. Insert a new bulb by inserting it into the socket and rotating it until it locks into place.
8. Install the socket into the assembly by aligning the tabs on the socket with the slots in the assembly. Push the socket into the assembly and turn the socket clockwise.
9. Reinstall the lamp assembly to the body of the vehicle.

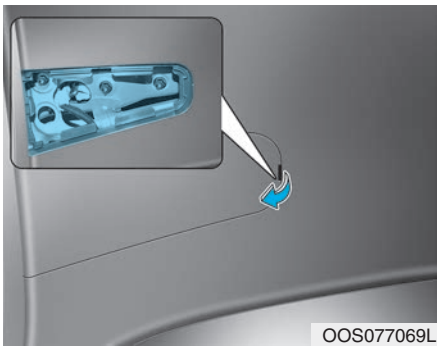

Tail lamp (Type A)

1. Turn off the engine.
2. Open the tailgate.
3. Remove the service cover using a flat-blade screwdriver.
4. Remove the socket from the assembly by turning the socket counterclockwise until the tabs on the socket align with the slots on the assembly.
5. Remove the bulb from the socket by pressing it in and rotating it counterclockwise until the tabs on the bulb align with the slots in the socket. Pull the bulb out of the socket.
6. Insert a new bulb by inserting it into the socket and rotating it until it locks into place.
7. Install the socket into the assembly by aligning the tabs on the socket with the slots in the assembly. Push the socket into the assembly and turn the socket clockwise.
8. Reinstall the lamp assembly to the body of the vehicle.

Tail / Stop lamp (Type B)

Your vehicle is equipped with LED lamps. LED lamps do not have replaceable bulbs. If the LED lamp does not operate, have the vehicle checked by an authorized HYUNDAi dealer.

Turn signal lamp / Back up lamp

If the light bulb does not operate, have the vehicle checked by an authorized HYUNDAI dealer.

Side marker

Your vehicle is equipped with LED lamps. LED lamps do not have replaceable bulbs. If the LED lamp does not operate, have the vehicle checked by an authorized HYUNDAI dealer.

High Mounted Stop Lamp Replacement

1. Open the liftgate.
2. Gently remove the cover of the liftgate trim.
3. Remove the spoiler plug hole.
4. Disconnect the connector and remove the washer hose and the plug holes.
5. Remove the mounting nuts.
6. Remove the rear spoiler assembly.
7. Remove the high mounted stop lamp after removing the mounting nuts.
8. Install a new lamp
9. Reinstall the rear spoiler and the liftgate upper trim in the reverse order.

License Plate Light Bulb Replacement

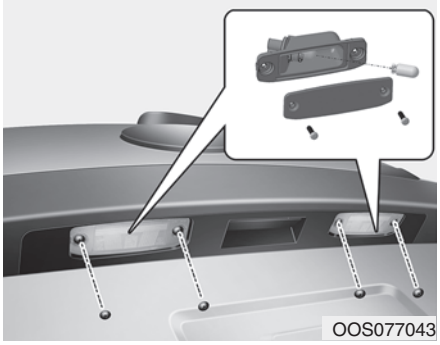
OOS077043

1. Using a flat-blade screwdriver, gently pry the lens cover from the lamp housing.
2. Remove the bulb by pulling it straight out.
3. Install a new bulb.
4. Reinstall in the reverse order.

Interior Light Bulb Replacement

Map lamp, Room lamp, Vanity mirror lamp, Luggage compartment lamp and Glove box lamp

■ Map lamp (Type A)

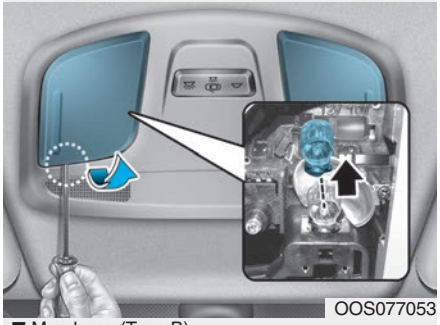
OOS077053

■ Room lamp (Type A)

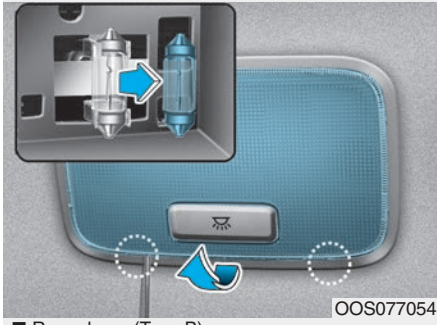
OOS077054

■ Map lamp (Type B)

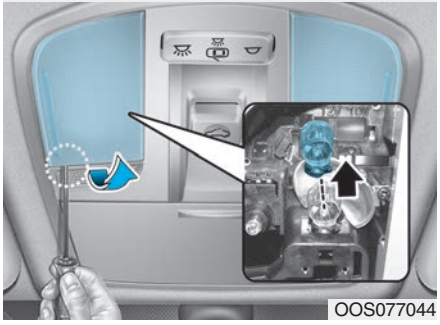
OOS077044

■ Room lamp (Type B)

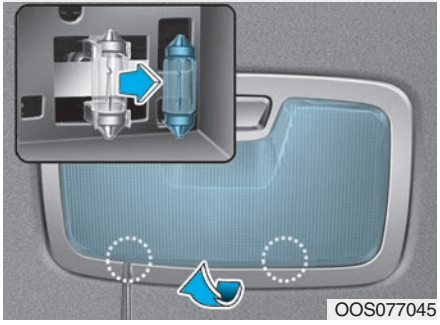
OOS077045

■ Vanity mirror lamp

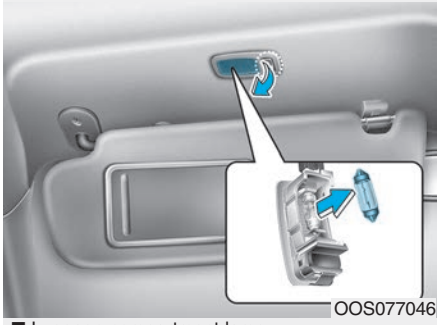

■ Luggage compartment lamp

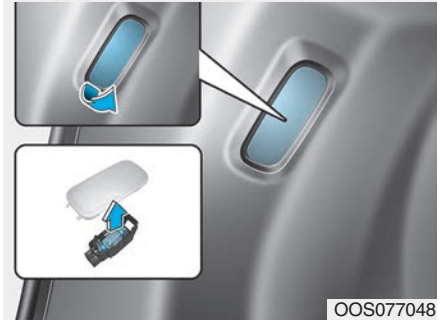

■ Glove box lamp

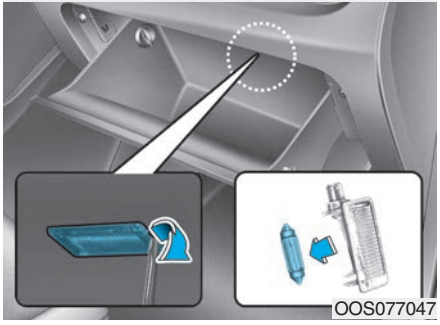

1. Using a flat-blade screwdriver, gently pry the lens from the interior lamp housing.
2. Remove the bulb by pulling it straight out.

⚠ WARNING

Prior to working on the Interior Lights, ensure that the "OFF" button is depressed to avoid burning your fingers or receiving an electric shock.

3. Install a new bulb in the socket.
4. Align the lens tabs with the interior lamp housing notches and snap the lens into place.

NOTICE

Use care not to dirty or damage lens, lens tab, and plastic housings.

APPEARANCE CARE

Exterior Care

Exterior general caution

It is very important to follow the label directions when using any chemical cleaner or polish. Read all warning and caution statements that appear on the label.

High-pressure washing

- When using high-pressure washers, make sure to maintain sufficient distance from the vehicle. Insufficient clearance or excessive pressure can lead to component damage or water penetration.
- Do not spray the camera, sensors or its surrounding area directly with a high pressure washer. Shock applied from high pressure water may cause the device to not operate normally.
- Do not bring the nozzle tip close to boots (rubber or plastic covers)or connectors as they may be damaged if they come into contact with high pressure water.
- Do not use any high-pressure nozzles, which induce either one-direct water stream or water swirling.

Protecting your vehicle's finish

Washing

To help protect your vehicle's finish from rust and deterioration, wash it thoroughly and frequently at least once a month with lukewarm or cold water.

If you use your vehicle for off-road driving, you should wash it after each off-road trip. Pay special attention to the removal of any accumulation of salt, dirt, mud, and other foreign materials. Make sure the drain holes in the lower edges of the doors and rocker panels are kept clear and clean.

Insects, tar, tree sap, bird droppings, industrial pollution and similar deposits can damage your vehicle's finish if not removed immediately.

Even prompt washing with plain water may not completely remove all these deposits. A mild soap, safe for use on painted surfaces, should be used.

After washing, rinse the vehicle thoroughly with lukewarm or cold water. Do not allow soap to dry on the finish.

⚠ WARNING

After washing the vehicle, test the brakes while driving slowly to see if they have been affected by water before getting on the road. If braking performance is impaired, dry the brakes by applying them lightly while maintaining a slow forward speed.

NOTICE

- **Do not use strong soap, chemical detergents or hot water, and do not wash the vehicle in direct sunlight or when the body of the vehicle is warm.**
- **Be careful when washing the side windows of your vehicle.**

  Especially, with high-pressure water, water may leak through the windows and wet the interior.
- **To prevent damage to the plastic parts, do not clean with chemical solvents or strong detergents.**

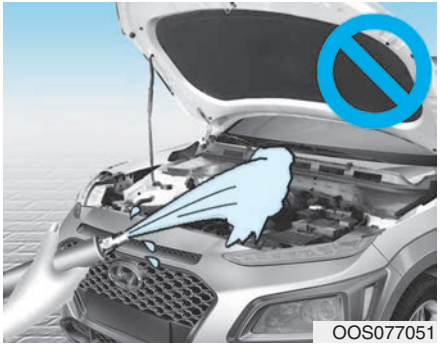

NOTICE

- **Water washing in the engine compartment including high pressure water washing may cause the failure of electrical circuits located in the engine compartment.**
- **Never allow water or other liquids to come in contact with electrical/electronic components inside the vehicle as this may damage them.**

Waxing

A good coat of wax provides a barrier between your paint and environmental contamination.

Keeping a good coat of wax on your vehicle will help protect it.

Wax the vehicle when water will no longer bead on the paint.

Always wash and dry the vehicle before waxing. Use a good quality liquid or paste wax, and follow the manufacturer's instructions. Wax all metal trim to protect it and to maintain its luster.

Removing oil, tar, and similar materials with a spot remover will usually strip the wax from the finish. Be sure to re-wax these areas even if the rest of the vehicle does not yet need waxing.

NOTICE

- **Wiping dust or dirt off the body with a dry cloth will scratch the finish.**
- **Do not use steel wool, abrasive cleaners, or strong detergents containing highly alkaline or caustic agents on chrome-plated or anodized aluminum parts. This may result in damage to the protective coating and cause discoloration or paint deterioration.**

Repairing your vehicle's finish

Deep scratches or stone chips in the painted surface must be repaired promptly. Exposed metal will quickly rust and may develop into a major repair expense.

NOTICE

If your vehicle is damaged and requires any metal repair or replacement, be sure the body shop applies anti-corrosion materials to the parts repaired or replaced.

Bright-metal maintenance

- To remove road tar and insects, use a tar remover, not a scraper or other sharp object.
- To protect the surfaces of bright-metal parts from corrosion, apply a coating of wax or chrome preservative and rub to a high luster.
- During winter weather or in coastal areas, cover the bright metal parts with a heavier coating of wax or preservative. If necessary, coat the parts with non-corrosive petroleum jelly or other protective compound.

Underbody maintenance

Corrosive materials used for ice and snow removal and dust control may collect on the underbody. If these materials are not removed, accelerated rusting can occur on underbody parts such as the fuel lines, frame, floor pan and exhaust system, even though they have been treated with rust protection.

Thoroughly flush the vehicle underbody and wheel openings with lukewarm or cold water once a month, after off-road driving and at the end of each winter. Pay special attention to these areas because it is difficult to see all the mud and dirt. It will do more harm than good to wet down the road grime without removing it. The lower edges of doors, rocker panels, and frame members have drain holes that should not be allowed to clog with dirt; trapped water in these areas can cause rusting.

⚠ WARNING

After washing the vehicle, test the brakes while driving slowly to see if they have been affected by water. If braking performance is impaired, dry the brakes by applying them lightly while maintaining a slow forward speed.

Aluminum wheel maintenance

The aluminum wheels are coated with a clear protective finish.

NOTICE

- **Do not use abrasive cleaner, polishing compound, solvent, or wire brushes on aluminum wheels.**
- **Clean the wheel when it has cooled.**
- **Use only a mild soap or neutral detergent, and rinse thoroughly with water. Also, clean the wheels after driving on salted roads.**
- **Do not wash the wheels with high-speed car wash brushes.**
- **Do not use any cleaners containing acid or alkaline detergents.**

Corrosion protection

Protecting your vehicle from corrosion

By using the most advanced design and construction practices to combat corrosion, HYUNDAI produces vehicles of the highest quality. However, this is only part of the job. To achieve the long-term corrosion resistance your vehicle can deliver, the owner's cooperation and assistance is also required.

Common causes of corrosion

The most common causes of corrosion on your vehicle are:

- Road salt, dirt and moisture that is allowed to accumulate underneath the vehicle.
- Removal of paint or protective coatings by stones, gravel, abrasion or minor scrapes and dents which leave unprotected metal exposed to corrosion.

High-corrosion areas

If you live in an area where your vehicle is regularly exposed to corrosive materials, corrosion protection is particularly important. Some of the common causes of accelerated corrosion are road salts, dust control chemicals, ocean air and industrial pollution.

Moisture breeds corrosion

Moisture creates the conditions in which corrosion is most likely to occur. For example, corrosion is accelerated by high humidity, particularly when temperatures are just above freezing. In such conditions, the corrosive material is kept in contact with the car surfaces by moisture that is slow to evaporate.

Mud is particularly corrosive because it is slow to dry and holds moisture in contact with the vehicle. Although the mud appears to be dry, it can still retain the moisture and promote corrosion.

High temperatures can also accelerate corrosion of parts that are not properly ventilated so the moisture can be dispersed. For all these reasons, it is particularly important to keep your vehicle clean and free of mud or accumulations of other materials. This applies not only to the visible surfaces but particularly to the underside of the vehicle.

To help prevent corrosion

Keep your vehicle clean

The best way to prevent corrosion is to keep your vehicle clean and free of corrosive materials. Attention to the underside of the vehicle is particularly important.

- If you live in a high-corrosion area — where road salts are used, near the ocean, areas with industrial pollution, acid rain, etc.—, you should take extra care to prevent corrosion. In winter, hose off the underside of your vehicle at least once a month and be sure to clean the underside thoroughly when winter is over.

- When cleaning underneath the vehicle, pay particular attention to the components under the fenders and other areas that are hidden from view. Do a thorough job; just dampening the accumulated mud rather than washing it away will accelerate corrosion rather than prevent it. Water under high pressure and steam are particularly effective in removing accumulated mud and corrosive materials.
- When cleaning lower door panels, rocker panels and frame members, be sure that drain holes are kept open so that moisture can escape and not be trapped inside to accelerate corrosion.

Keep your garage dry

Don't park your vehicle in a damp, poorly ventilated garage. This creates a favorable environment for corrosion. This is particularly true if you wash your vehicle in the garage or drive it into the garage when it is still wet or covered with snow, ice or mud. Even a heated garage can contribute to corrosion unless it is well ventilated so moisture is dispersed.

Keep paint and trim in good condition

Scratches or chips in the finish should be covered with "touch-up" paint as soon as possible to reduce the possibility of corrosion. If bare metal is showing through, the attention of a qualified body and paint shop is recommended.

Bird droppings are highly corrosive and may damage painted surfaces in just a few hours. Always remove bird droppings as soon as possible.

Interior Care

Interior general precautions

Prevent caustic solutions such as perfume and cosmetic oil, from contacting the interior parts because they may cause damage or discoloration. If they do contact the interior parts, wipe them off immediately. See the instructions for the proper way to clean vinyl.

NOTICE

- **Never allow water or other liquids to come in contact with electrical/electronic components inside the vehicle as this may damage them.**
- **When cleaning leather products (steering wheel, seats etc.), use neutral detergents or low alcohol content solutions. If you use high alcohol content solutions or acid/ alkaline detergents, the color of the leather may fade or the surface may get stripped off.**

Cleaning the upholstery and interior trim

Vinyl (if equipped)

Remove dust and loose dirt from vinyl with a whisk broom or vacuum cleaner. Clean vinyl surfaces with a vinyl cleaner.

Fabric (if equipped)

Remove dust and loose dirt from fabric with a whisk broom or vacuum cleaner. Clean with a mild soap solution recommended for upholstery or carpets. Remove fresh spots immediately with a fabric spot cleaner. If fresh spots do not receive immediate attention, the fabric can be stained and its color can be affected. Also, its fire-resistant properties can be reduced if the material is not properly maintained.

NOTICE

Using anything but recommended cleaners and procedures may affect the fabric's appearance and fire-resistant properties.

Leather (if equipped)

- Features of seat leather
  - Leather is made from the outer skin of an animal, which goes through a special process to be available for use. Since it is a natural product, each part differs in thickness or density.

    Wrinkles may appear as a natural result of stretching and shrinking depending on the temperature and humidity.
  - The seat is made of stretchable fabric to improve comfort.
  - The parts contacting the body are curved and the side supporting area is high which provides driving comfort and stability.
  - Wrinkles may appear naturally from usage. It is not a fault of the products.

⚠ CAUTION

- **Wrinkles or abrasions which appear naturally from usage are not covered by warranty.**
- **Belts with metallic accessories, zippers or keys inside the back pocket may damage the seat fabric.**
- **Make sure not to wet the seat. It may change the nature of natural leather.**
- **Jeans or clothes which could bleach may contaminate the surface of the seat covering fabric.**

- Caring for the leather seats
  - Vacuum the seat periodically to remove dust and sand on the seat. It will prevent abrasion or damage of the leather and maintain its quality.
  - Wipe the natural leather seat cover often with dry or soft cloth.
  - Use of proper leather protector may prevent abrasion of the cover and helps maintain the color. Be sure to read the instructions and consult a specialist when using leather coating or protective agent.
  - Light colored (beige, cream beige) leather is easily contaminated and the stain is noticeable. Clean the seats frequently.
  - Avoid wiping with wet cloth. It may cause the surface to crack.

- Cleaning the leather seats
  - Remove all contaminations instantly. Refer to instructions below for removal of each contaminant.
  - Cosmetic products (sunscreen, foundation, etc.)

    Apply cleansing cream on a cloth and wipe the contaminated spot. Wipe off the cream with a wet cloth and remove water with a dry cloth.
  - Beverages (coffee, soft drink, etc.)

    Apply a small amount of neutral detergent and wipe until contaminations do not smear.
  - Oil

    Remove oil instantly with absorbable cloth and wipe with stain remover used only for natural leather.
  - Chewing gum

    Harden the gum with ice and remove gradually.

Cleaning the seat belt webbing

Clean the belt webbing with any mild soap solution recommended for cleaning upholstery or carpet. Follow the instructions provided with the soap. Do not bleach or re-dye the webbing because this may weaken the seat belt.

Cleaning the interior window glass

If the interior glass surfaces of the vehicle become fogged (that is, covered with an oily, greasy or waxy film), they should be cleaned with glass cleaner. Follow the directions on the glass cleaner container.

NOTICE

Do not scrape or scratch the inside of the rear window. This may result in damage to the rear window defroster grid.

EMISSION CONTROL SYSTEM

The emission control system of your vehicle is covered by a written limited warranty. Please see the warranty information contained in the Owner's Handbook & Warranty Information booklet in your vehicle.

Your vehicle is equipped with an emission control system to meet all applicable emission regulations. There are three emission control systems, as follows.

(1) Crankcase emission control system
(2) Evaporative emission control system
(3) Exhaust emission control system

In order to ensure the proper function of the emission control systems, it is recommended that you have your vehicle inspected and maintained by an authorized HYUNDAI dealer in accordance with the maintenance schedule in this manual.

NOTICE

For the Inspection and Maintenance Test (with Electronic Stability Control (ESC) system)

- **To prevent the vehicle from misfiring during dynamometer testing, turn the Electronic Stability Control (ESC) system off by pressing the ESC switch (ESC OFF light illuminated).**
- **After dynamometer testing is completed, turn the ESC system back on by pressing the ESC switch again.**

1. Crankcase Emission Control System

The positive crankcase ventilation system is employed to prevent air pollution caused by blow-by gases being emitted from the crankcase. This system supplies fresh filtered air to the crankcase through the air intake hose. Inside the crankcase, the fresh air mixes with blow-by gases, which then pass through the PCV valve into the induction system.

2. Evaporative Emission Control System Including Onboard Refueling Vapor Recovery (ORVR)

The Evaporative Emission Control System is designed to prevent fuel vapors from escaping into the atmosphere. The ORVR system is designed to allow the vapors from the fuel tank to be loaded into a canister while refueling at the gas station, preventing the escape of fuel vapors into the atmosphere.

Canister

Fuel vapors generated inside the fuel tank are absorbed and stored in the onboard canister. When the engine is running, the fuel vapors absorbed in the canister are drawn into the surge tank through the purge control solenoid valve.

Purge Control Solenoid Valve (PCSV)

The purge control solenoid valve is controlled by the Engine Control Module (ECM); when the engine coolant temperature is low during idling, the PCSV closes so that evaporated fuel is not taken into the engine. After the engine warms-up during ordinary driving, the PCSV opens to introduce evaporated fuel to the engine.

3. Exhaust Emission Control System

The Exhaust Emission Control System is a highly effective system which controls exhaust emissions while maintaining good vehicle performance.

When the engine starts or fails to start, excessive attempts to restart the engine may cause damage to the emission system.

Engine exhaust (carbon monoxide) precautions

- Carbon monoxide can be present with other exhaust fumes. If you smell exhaust fumes of any kind in your vehicle, drive with all the windows fully open. Have your vehicle checked and repaired immediately.

⚠ WARNING

Engine exhaust gases contain carbon monoxide (CO). Though colorless and odorless, it is dangerous and could be lethal if inhaled. Follow the instructions on this page to avoid CO poisoning.

⚠ WARNING

CALIFORNIA PROPOSITION 65 WARNING

Engine exhaust and a wide variety of automobile components and parts, including components found in the interior furnishings in a vehicle, contain or emit chemicals known to the State of California to cause cancer and birth defects and reproductive harm. In addition, certain fluids contained in vehicles and certain products of component wear contain or emit chemicals known to the State of California to cause cancer and birth defects or other reproductive harm.

- Do not operate the engine in confined or closed areas (such as garages) any more than what is necessary to move the vehicle in or out of the area.
- When the vehicle is stopped in an open area for more than a short time with the engine running, adjust the ventilation system (as needed) to draw outside air into the vehicle.
- Never sit in a parked or stopped vehicle for any extended time with the engine running.
- When the engine stalls or fails to start, excessive attempts to restart the engine may cause damage to the emission control system.

Operating precautions for catalytic converters (if equipped)

⚠ WARNING

The exhaust system and catalytic converter are very hot during and immediately after the engine has been running. To avoid SERIOUS INJURY or DEATH:

- **Do not park, idle, or drive the vehicle over or near flammable objects, such as grass, vegetation, paper, leaves, etc. A hot exhaust system can ignite flammable items under your vehicle.**
- **Keep away from the exhaust system and catalytic converter or you may get burned.**

  Also, Do not remove the heat sink around the exhaust system, do not seal the bottom of the vehicle, and do not coat the vehicle for corrosion control. It may present a fire risk under certain conditions.

Your vehicle is equipped with a catalytic converter emission control device.

To prevent damage to the catalytic converter and to your vehicle, take the following precautions:

- Use only UNLEADED FUEL for gasoline engines.
- Do not operate the vehicle when there are signs of engine malfunction, such as misfire or a noticeable loss of performance.
- Do not misuse or abuse the engine. Examples of misuse are coasting with the engine off and descending steep grades in gear with the engine off.
- Do not operate the engine at high idle speed for extended periods (5 minutes or more).
- Do not modify or tamper with any part of the engine or emission control system. All inspections and adjustments must be made by an authorized HYUNDAI dealer.
- Avoid driving with extremely low fuel level. If you run out of gasoline, it could cause the engine to misfire and result in excessive loading of the catalytic converter.

CALIFORNIA PERCHLORATE NOTICE

Perchlorate Material-special handling may apply, See: www.dtsc.ca.gov/hazardouswaste/perchlorate.

Notice to California Vehicle Dismantlers:

Perchlorate containing materials, such as air bag inflators, seatbelt pretensioners and keyless remote entry batteries, must be disposed of according to Title 22 California Code of Regulations Section 67384.10 (a).

Specifications, Consumer information and Reporting safety defects

Dimensions 8-2
Engine 8-2
Bulb Wattage 8-3
Tires and Wheels 8-5
Volume and Weight 8-6
Air Conditioning System 8-6
Recommended Lubricants and Capacities 8-7
Recommended SAE viscosity number 8-9
Vehicle Identification Number (VIN) 8-10
Vehicle Certification Label 8-10
Tire Specification and Pressure Label 8-11
Engine Number 8-11
Refrigerant Label 8-11
Consumer Information 8-12
Reporting Safety Defects 8-13

DIMENSIONS

Items		in (mm)
Overall length		163.97 (4,165)
Overall width		70.86 (1,800)
Overall height		61.02 (1,550) / 61.61 (1,565)*1
Front tread	205/60 R16	62.0 (1,575)
	215/55 R17	61.53 (1,563)
	235/45 R18	61.37 (1,559)
Rear tread	205/60 R16	62.36 (1,584)
	215/55 R17	61.88 (1,572)
	235/45 R18	61.73 (1,568)
Wheelbase		102.36 (2,600)

*1 : with roof rack

ENGINE

Items	Gamma 1.6 T-GDI	Nu 2.0 MPI
Displacement cu. in. (cc)	97.09 (1,591)	121.98 (1,999)
Bore x Stroke in. (mm)	3.03x3.36 (77x85.4)	3.18x3.82 (81x97)
Firing order	1-3-4-2	1-3-4-2
No. of cylinders	In-line 4 cylinder	In-line 4 cylinder

BULB WATTAGE

Light Bulb			Bulb Type	Wattage
Front	Headlamp	Low (Type A)	H7	55
		High (Type A)	H7	55
		Low (Type B)	LED	LED
		High (Type B)	LED	LED
		Cornering lamp	H7	55
	Turn signal lamp		PY28/8W	28
	Side marker		LED	LED
	Turn signal lamp (Outside mirror)		LED	LED
	Daytime running lamp (DRL) / position lamp		LED	LED
	Fog lamp		H8	35
Rear	Rear combination lamp	Stop/Tail (Type A)	P21/5W	21/5
		Tail (Type A)	W5W	5
		Stop/Tail (Type B)	LED	LED
		Turn signal	P21W	21
		Back up	P21W	21
	High mounted stop lamp		LED	LED
	Side marker	Type A	W5W	5
		Type B	LED	LED
	License plate lamp		W5W	5

Light Bulb		Bulb Type	Wattage
Interior	Map lamp	W10W	10
	Room lamp (with sunroof)	FESTOON	10
	Room lamp (without sunroof)	FESTOON	8
	Sunvisor lamp	FESTOON	5
	Tailgate room lamp	FESTOON	10
	Glove box lamp	FESTOON	5

TIRES AND WHEELS

Item	Tire Size	Wheel Size	Cold tire inflation pressure kPa(psi)		Wheel Lug Nut Torque kgf·m (lbf·ft, N·m)
			Front	Rear	
Full size tire	205/60 R16	6.5J x 16	230 (33)	230 (33)	11~13 (79~94,107~127)
	215/55 R17	7.0J x 17			
	235/45 R18	7.5J x 18			
Compact spare tire	T125/80 D16	4.0T x 16	420 (60)		

NOTICE

- **It is permissible to add 3 psi to the standard tire pressure specification if colder temperatures are expected soon.**

  Tires typically loose 1psi (7kPa) for every 12°F temperature drop. If extreme temperature variations are expected, recheck your tire pressure as necessary to keep them properly inflated.
- **An air pressure generally decreases, as you drive up to a high-altitude area above sea level. Thus, if you plan to drive a high-altitude area, check the tire pressures in advance. If necessary, inflate them to a proper level. (Air inflation per altitude : +2.4 psi/1 mile)**

⚠ CAUTION

When replacing tires, use the same size originally supplied with the vehicle.
Using tires of a different size can damage the related parts or not work properly.

VOLUME AND WEIGHT

Items	Gamma 1.6 T-GDI		Nu 2.0 MPI	
	DCT (2WD)	DCT (AWD)	A/T (2WD)	A/T (AWD)
Gross vehicle weight lbs. (kg)	4,045 (1,835)	4,255 (1,930)	3,979 (1,805)	4,189 (1,900)
Luggage volume (SAE) cu. ft. (*l*)	Behind 1st row : 45.7 (1,296) Behind 2nd row : 19.2 (544)			

A/T : Automatic transmission

DCT : Dual clutch transmission

AIR CONDITIONING SYSTEM

Items	Weight of Volume	Classification
Refrigerant oz. (g)	15.87 (450) ± 0.88 (25)	R-1234yf
Compressor lubricant oz. (cc)	4.23 (120) ± 0.35 (10)	PAG

Contact an authorized HYUNDAI dealer for more details.

RECOMMENDED LUBRICANTS AND CAPACITIES

To help achieve proper engine and powertrain performance and durability, use only lubricants of the proper quality. The correct lubricants also help promote engine efficiency that results in improved fuel economy.

Lubricant		Volume	Classification
Engine oil *1 *2 (drain and refill) Recommends	Gamma 1.6 T-GDI	4.76 US qt. (4.5 *l*)	ACEA A5/B5 *4
	Nu 2.0 MPI	4.23 US qt. (4.0 *l*)	API SM *3 & ILSAC GF-4 (or above) ACEA A5/B5 *4
Automatic transmission fluid	Nu 2.0 MPI	7.08 US qt. (6.7 *l*)	MICHANG ATF SP-IV, SK ATF SP-IV, NOCA ATF SP-IV, HYUNDAI genuine ATF SP-IV or other brands meeting the above specification approved by HYUNDAI Motor Co.
Dual clutch transmission fluid	Gamma 1.6 T-GDI	2.01~2.11 US qt. (1.9~2.0 *l*)	HK SYN DCTF 70W (SK) SPIRAX S6 GHME 70W DCTF (H.K.SHELL) GS DCTF HD 70W (GS CALTEX) (API GL-4, SAE 70W)

Lubricant		Volume	Classification
Transfer case oil (AWD)	Gamma 1.6 T-GDI	0.44 ~ 0.49 US qt. (0.47~0.52 *l*)	HYPOID GEAR OIL API GL-5, SAE75W/90 (SHELL HD AXLE OIL 75W90 or equivalent)
	Nu 2.0 MPI	0.36~0.4 US qt. (0.38~0.42 *l*)	
Rear differential oil (AWD)		0.44~0.49 US qt. (0.47~0.52 *l*)	
Coolant	Gamma 1.6 T-GDI	7.5 US qt. (7.1 *l*)	Mixture of antifreeze and water (Phosphate-based Ethylene glycol coolant for aluminum radiator)
	Nu 2.0 MPI	6.8 US qt. (6.5 *l*)	
Brake fluid		0.74~0.85 US qt. (0.7 ~ 0.8 *l*)	FMVSS116 DOT-3 or DOT-4
Fuel		13.2 US gal. (50 *l*)	Refer to "Fuel requirements" in the Foreword chapter.

*1 : Refer to the recommended SAE viscosity numbers on the next page.

*2 : Engine oils labeled Energy Conserving Oil are now available. Along with other additional benefits, they contribute to fuel economy by reducing the amount of fuel necessary to overcome engine friction. Often, these improvements are difficult to measure in everyday driving, but in a year's time, they can offer significant cost and energy savings.

*3 : If the API service SM engine oil is not available in your country, you are able to use API service SL.

*4 : If the ACEA A5 engine oil is not available in your country, you are able to use ILSAC GF-3 (or above) or ACEA A3 (or above).

Recommended SAE viscosity number

⚠ CAUTION

Always be sure to clean the area around any filler plug, drain plug, or dipstick before checking or draining any lubricant. This is especially important in dusty or sandy areas and when the vehicle is used on unpaved roads. Cleaning the plug and dipstick areas will prevent dirt and grit from entering the engine and other mechanisms that could be damaged.

Engine oil viscosity (thickness) has an effect on fuel economy and cold weather operating (engine start and engine oil flowability). Lower viscosity engine oils can provide better fuel economy and cold weather performance, however, higher viscosity engine oils are required for satisfactory lubrication in hot weather.

Using oils of any viscosity other than those recommended could result in engine damage.

When choosing an oil, consider the range of temperature your vehicle will be operated in before the next oil change. Proceed to select the recommended oil viscosity from the chart.

Temperature Range for SAE Viscosity Numbers

Temperature		°C	-30	-20	-10	0	10	20	30	40	50
		(°F)	-10	0	20	40	60	80	100	120	
Engine Oil	Gamma 1.6 T-GDI *1				20W-50						
					15W-40						
				10W-30							
			5W-30, 5W-40								
	Nu 2.0 MPI *2			10W-30							
			5W-20, 5W-30								

*1 : For better fuel economy, it is recommended to use the engine oil of a viscosity grade 5W-30 (ACEA A5 or above). However, if the engine oil is not available in your country, select the proper engine oil using the engine oil viscosity chart.

*2 : For better fuel economy, it is recommended to use the engine oil of a viscosity grade SAE 5W-20 (API SM / ILSAC GF-4). However, if the engine oil is not available in your country, select the proper engine oil using the engine oil viscosity chart.

VEHICLE IDENTIFICATION NUMBER (VIN)

■ Frame number

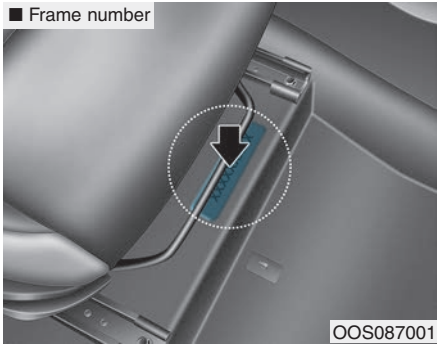

The vehicle identification number (VIN) is the number used in registering your car and in all legal matters pertaining to its ownership, etc.

The number is punched on the floor under the passenger seat. To check the number, open the cover.

■ VIN label

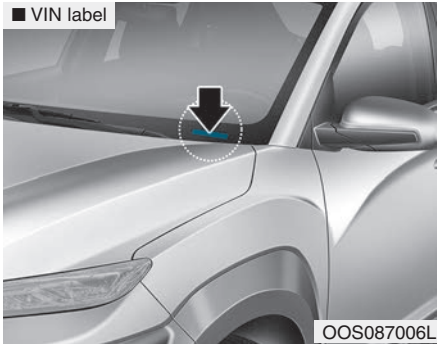

The VIN is also on a plate attached to the top of the dashboard. The number on the plate can easily be seen through the windshield from outside.

VEHICLE CERTIFICATION LABEL

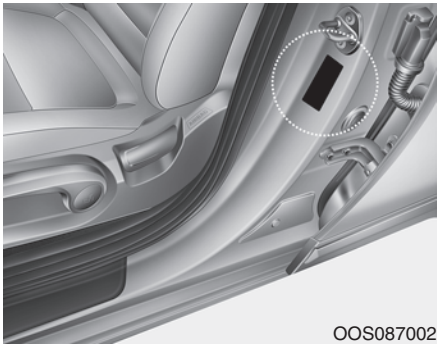

The vehicle certification label attached on the driver's side center pillar gives the Vehicle Identification Number (VIN).

TIRE SPECIFICATION AND PRESSURE LABEL

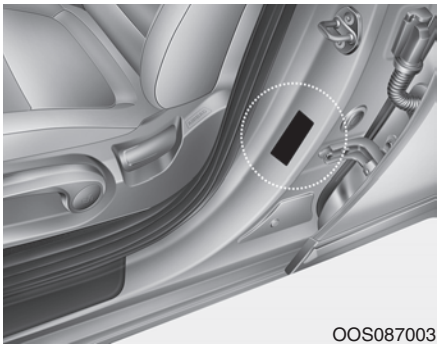
OOS087003

The tires supplied on your new vehicle are chosen to provide the best performance for normal driving.

The tire label located on the driver's side center pillar gives the tire pressures recommended for your car.

ENGINE NUMBER

■ Gamma 1.6 T-GDI

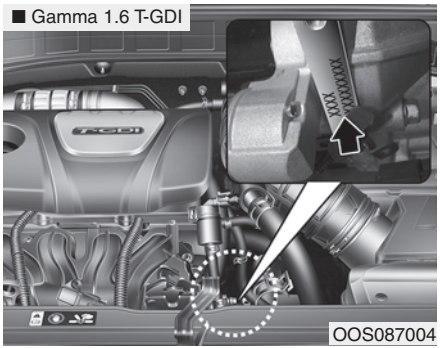
OOS087004

■ Nu 2.0 MPI

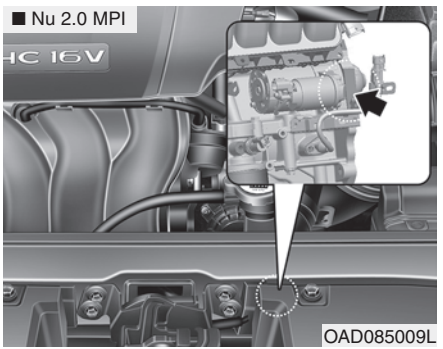
OAD085009L

The engine number is stamped on the engine block as shown in the drawing.

REFRIGERANT LABEL (IF EQUIPPED)

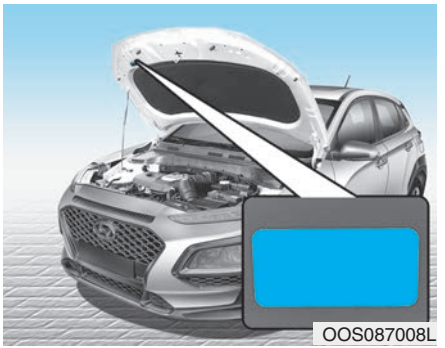
OOS087008L

The refrigerant label provides information such as refrigerant type and amount.

The label is located on the underside of the hood.

CONSUMER INFORMATION

This consumer information has been prepared in accordance with regulations issued by the National Highway Traffic Safety Administration of the U.S. Department of Transportation. Your HYUNDAI dealer will help answer any questions you may have as you read this information.

HYUNDAI motor vehicles are designed and manufactured to meet or exceed all applicable safety standards.

For your safety, however, we strongly urge you to read and follow all directions in this Owner's Manual, particularly the information under the headings **"NOTICE", "CAUTION" and "WARNING".**

If, after reading this manual, you have any questions regarding the operation of your vehicle, please contact your nearest HYUNDAI Motor America Regional Office as listed in the following:

Eastern Region:

Connecticut, Delaware, Maine, Massachusetts, New Hampshire, New Jersey, New York, Pennsylvania, Rhode Island, Vermont.
Eastern Region
1122 Cranbury South River Road
Jamesburg, NJ 08831
(800) 633-5151

Southern Region:

Florida, Georgia, Maryland, North Carolina, South Carolina, Virginia, West Virginia.

Southern Region

3025 Chastain Meadows Parkway Suite 100 Marietta, GA 30066

(800) 633-5151

South Central Region:

Alabama, Arkansas, Louisiana, Mississippi, New Mexico, Oklahoma, Tennessee, Texas.

South Central Region

1421 South Beltline Road, Suite 400 Coppell, TX 75019

(800) 633-5151

Central Region:

Illinois, Indiana, Iowa, Kentucky, Michigan, Minnesota, Nebraska, North Dakota, South Dakota, Ohio, Wisconsin, Kansas, Missouri.

Central Region

2 Trans Am Plaza Dr #500 Oakbrook Terrace, IL 60181

(800) 633-5151

Western Region:

Alaska, Hawaii, Arizona, California, Colorado, Idaho, Montana, Nevada, Oregon, Utah, Washington, Wyoming.

Western Region

10550 Talbert Avenue P.O.Box 20850 Fountain Valley, California 92728-0850

(800) 633-5151

REPORTING SAFETY DEFECTS

If you believe that your vehicle has a defect which could cause a crash or could cause injury or death, you should immediately inform the National Highway Traffic Safety Administration (NHTSA) in addition to notifying HYUNDAI MOTOR AMERICA.

To contact NHTSA, you may call the Vehicle Safety Hotline toll-free at 1-888- 327-4236 (TTY: 1-800-424-9153);

go to http://www.safercar.gov;

download the SaferCar mobile application;

or write to: Administrator, NHTSA
1200 New Jersey Ave, SE,
West Building Washington, D.C. 20590.

You can also obtain other information about motor vehicle safety from http://www.safercar.gov.

If NHTSA receives similar complaints, it may open an investigation, and if it finds that a safety defect exists in a group of vehicles, it may order a recall and remedy campaign. However, NHTSA cannot become involved in individual problems between you, your dealer, or HYUNDAI MOTOR AMERICA.

Index

A

Accessing Your Vehicle 3-3
Immobilizer System.....3-11
Remote Key.....3-3
Smart Key.....3-6
Air Bag - Advanced Supplemental Restraint System.....2-45
Additional Safety Precautions.....2-67
Air Bag Warning Labels.....2-67
How Does the Air Bag System Operate?.....2-50
Occupant Classification System (OCS) 2-56
SRS Care 2-66
What to Expect After an Air Bag Inflates.....2-55
Where Are the Air Bags? 2-47
Why Didn't My Air Bag Go Off in a Collision?.....2-61
Air cleaner.....7-29
Filter Replacement 7-29
Air Conditioning System 8-6
All Wheel Drive (AWD).....5-40
AWD operation.....5-41
Emergency precautions 5-44
Appearance care.....7-80
Exterior Care 7-80
Interior Care 7-84
Automatic Climate Control System.....3-116
Automatic Temperature Control Mode 3-117
Manual Temperature Control Mode.....3-118
System Maintenance 3-123
System Operation 3-121
Automatic Transmission 5-14
Automatic Transmission Operation.....5-14
Good Driving Practices 5-18

B

Battery.....7-35
Battery Recharging.....7-36
For Best Battery Service 7-36
Reset Features 7-37
Before driving 5-4
Before Entering the Vehicle 5-4
Before Starting 5-4
Blind-spot Collision Warning (BCW) system 5-47
BCW (Blind-spot Collision Warning).....5-48
Detecting sensor 5-52
Limitations of the System 5-53
RCCW (Rear Cross-Traffic Collision Warning) 5-50
Brake fluid 7-27
Checking the Brake Fluid Level 7-27

Braking system 5-29
Anti-lock Brake System (ABS).....5-32
Disc Brakes Wear Indicator.....5-30
Downhill Brake Control (DBC).....5-37
Electronic Stability Control (ESC).....5-34
Good Braking Practices.....5-39
Hill-Start Assist Control (HAC).....5-37
Parking Brake.....5-30
Power Brakes.....5-29
Vehicle Stability Management (VSM).....5-36
Bulb Wattage.....8-3

C

California perchlorate notice 7-91
Child Restraint System (CRS).....2-34
Children Always in the Rear.....2-34
Installing a Child Restraint System (CRS) 2-37
Selecting a Child Restraint System (CRS).....2-35
Climate Control Additional Features.....3-130
Automatic Ventilation.....3-130
Cluster ionizer 3-130
Sunroof Inside Air Recirculation 3-130
Climate control air filter 7-30
Filter Inspection.....7-30
Consumer Information.....8-12
Cruise control.....5-79
Cruise Control operation 5-79

D

Dimensions 8-2
Door Locks 3-13
Automatic Door Lock and Unlock Features 3-17
Child-Protector Rear Door Locks 3-17
Operating Door Locks from Inside the Vehicle.....3-14
Operating Door Locks from Outside the Vehicle 3-13
Drive Mode Integrated Control System 5-46
Driver Assist System.....3-103
Rear Parking Sensor Warning System 3-104
Rear Parking Sensor Warning System Precautions..3-107
Rear view monitor.....3-103
Driver Attention Warning (DAW) system 5-75
Resetting the System 5-76
System Malfunction 5-77
System Setting and Activation 5-75
System Standby 5-77
Dual clutch transmission.....5-20
Dual Clutch Transmission Operation.....5-20
Good Driving Practices 5-27

E

Emission control system 7-87
Crankcase Emission Control System 7-87
Evaporative Emission Control System Including Onboard Refueling Vapor Recovery (ORVR) 7-87
Exhaust Emission Control System 7-88
Engine 8-2
Engine Compartment.....1-6, 7-3
Engine coolant 7-23
Changing Engine Coolant 7-26
Checking the Engine Coolant Level 7-23
Engine Number 8-11
Engine oil.....7-21
Checking the Engine Oil and Filter 7-22
Checking the Engine Oil Level.....7-21
Explanation of scheduled maintenance items.....7-18
Exterior Features 3-41, 3-142
Fuel Filler Door.....3-44
Hood 3-41
Liftgate 3-42
Roof Side Rails 3-142
Exterior Overview.....1-2

F

Forward Collision-avoidance Assist (FCA) system 5-55
FCA Sensor 5-59
FCA Warning Message and System Control.....5-57
Limitations of the System 5-62
System Malfunction 5-60
System Setting and Activation 5-55
Fuses 7-53
Engine Compartment Panel Fuse Replacement.....7-55
Fuse/Relay Panel Description 7-57
Instrument Panel Fuse Replacement.....7-54

H

Hazard warning flasher.....6-2
Head Up Display (HUD) 3-85

I

If the engine overheats.....6-6
If the engine will not start.....6-3
If the Engine Doesn't Turn Over or Turns Over Slowly 6-3
If the Engine Turns Over Normally but Doesn't Start.....6-3
If you have a flat tire 6-14
Changing Tires 6-15
Jack and Tools 6-14

Ignition switch 5-6
Engine Start/Stop Button.....5-9
Key Ignition Switch 5-6
Important Safety Precautions.....2-2
Air Bag Hazards.....2-2
Always Wear Your Seat Belt.....2-2
Control Your Speed 2-2
Driver Distraction.....2-2
Keep Your Vehicle in Safe Condition 2-2
Restrain All Children.....2-2
In case of an emergency while driving.....6-2
If the Engine Stalls at a Crossroad or Crossing 6-2
If the Engine Stalls While Driving.....6-2
If you Have a Flat Tire While Driving.....6-3
Instrument Cluster.....3-47
Gauges and Meters 3-49
Instrument Cluster Control.....3-48
LCD Display Messages.....3-65
Transmission shift indicator 3-52
Warning and Indicator Lights.....3-53
Instrument Panel Overview 1-5
Interior Features.....3-133
Cargo Area Cover.....3-140
Clock 3-138
Clothes Hanger.....3-138
Cup Holder 3-133
Floor Mat Anchor(s).....3-139
Luggage Net Holder.....3-139
Luggage tray.....3-141
Power Outlet.....3-135
Sunvisor.....3-134
Wireless Cellular Phone Charging System 3-136
Interior Overview.....1-4

J

Jump starting.....6-4

L

Lane Keeping Assist (LKA) system 5-67
Limitations of the System 5-73
LKA system Function Change 5-74
LKA system Operation.....5-68
Warning Light and Message.....5-72
LCD Display 3-70
LCD Display Control 3-70
LCD Display Modes 3-71

Light bulbs 7-69
Front fog lamp 7-74
Headlamp, Parking Lamp, Daytime Running Light, Turn Signal Lamp and Side Marker, Cornering lamp 7-69
High Mounted Stop Lamp Replacement 7-77
Interior Light Bulb Replacement 7-78
License Plate Light Bulb Replacement 7-78
Rear Combination Light Bulb Replacement 7-75
Side Repeater Lamp Replacement 7-74
Lighting 3-88
Exterior Lights 3-88
Interior Lights 3-96
Smart cornering lamp 3-95
Welcome System 3-98

M

Maintenance services 7-4
Owner Maintenance Precautions 7-4
Owner's Responsibility 7-4
Manual Climate Control System 3-108
Heating and Air Conditioning 3-109
System Maintenance 3-114
System Operation 3-112
Mirrors 3-21
Inside Rearview Mirror 3-21
Side View Mirrors 3-31
Multimedia System 4-2
Antenna 4-2
Audio (Display Audio) / Video / Navigation System (AVN) 4-4
AUX, USB and iPod® Port 4-2
Bluetooth® Wireless Technology Hands-Free 4-4
Steering Wheel Audio Controls 4-3

O

Owner maintenance 7-5
Owner Maintenance Schedule 7-6

P

Parking brake 7-28
Checking the Parking Brake 7-28

R

Recommended Lubricants and Capacities 8-7
Recommended SAE viscosity number 8-9
Refrigerant Label 8-11
Reporting Safety Defects 8-13

S

Scheduled maintenance services.....7-7
Maintenance Under Severe Usage Conditions (Gamma 1.6 T-GDI).....7-16
Maintenance Under Severe Usage Conditions (Nu 2.0 MPI).....7-11
Normal Maintenance Schedule (Gamma 1.6 T-GDI).....7-13
Normal Maintenance Schedule (Nu 2.0 MPI).....7-8
Seat Belts.....2-21
Additional Seat Belt Safety Precautions.....2-30
Care of Seat Belts.....2-33
Seat Belt Restraint System.....2-23
Seat Belt Safety Precautions.....2-21
Seat Belt Warning Light.....2-22
Seats.....2-3
Front Seats.....2-5
Head Restraints.....2-14
Rear Seats.....2-11
Safety Precautions.....2-4
Seat Warmers and Air Ventilation Seats.....2-18
Special driving conditions.....5-84
Driving at Night.....5-85
Driving in Flooded Areas.....5-86
Driving in the Rain.....5-85
Hazardous Driving Conditions.....5-84
Highway Driving.....5-86
Reducing the risk of a rollover.....5-87
Rocking the Vehicle.....5-84
Smooth Cornering.....5-85
Steering Wheel.....3-19
Electric Power Steering (EPS).....3-19
Heated Steering Wheel (for Canada).....3-21
Horn.....3-20
Tilt Steering / Telescope Steering.....3-20
Storage Compartment.....3-131
Center Console Storage.....3-131
Glove Box.....3-131
Multi Box.....3-132
Sunglass Holder.....3-132
Sunroof.....3-37
Resetting the sunroof.....3-39
Sliding the sunroof.....3-38
Sunroof Open Warning.....3-40
Sunroof opening and closing.....3-38
Sunshade.....3-39
Tilting the sunroof.....3-38

T

Theft-Alarm System 3-18
Tire Pressure Monitoring System (TPMS).....6-8
Changing a Tire with TPMS 6-12
Check Tire Pressure.....6-8
Low Tire Pressure LCD Display with Position Indicator 6-10
Low Tire Pressure Telltale.....6-10
Tire Pressure Monitoring System.....6-9
TPMS Malfunction Indicator 6-11
Tire Specification and Pressure Label 8-11
Tires and wheels.....7-38, 8-5
All Season Tires 7-50
Check Tire Inflation Pressure.....7-40
Low Aspect Ratio Tires.....7-51
Radial-Ply Tires.....7-51
Recommended Cold Tire Inflation Pressures.....7-39
Snow Tires.....7-51
Summer Tires 7-50
Tire Care.....7-38
Tire Maintenance.....7-43
Tire Replacement.....7-42
Tire Rotation.....7-40
Tire Sidewall Labeling 7-43
Tire Terminology and Definitions.....7-47
Tire Traction 7-43
Wheel Alignment and Tire Balance 7-41
Wheel Replacement.....7-43
Towing 6-20
Emergency Towing.....6-22
Removable Towing Hook.....6-21
Tie-down Hook.....6-23
Towing Service.....6-20
Trailer towing.....5-97
Trip Computer.....3-81

V

Vehicle Certification Label 8-10
Vehicle Identification Number (VIN).....8-10
Vehicle load limit.....5-92
Tire Loading Information Label.....5-93
Volume and Weight.....8-6

W

Washer fluid 7-28
Checking the Washer Fluid Level 7-28
Windows 3-33
Power Windows.....3-34
Windshield Defrosting and Defogging 3-125
Auto Defogging System (Additional Feature with Automatic Temperature Control System) 3-127
Rear Window Defroster.....3-129
Winter driving 5-88
Snow or Icy Conditions.....5-88
Winter Precautions 5-90
Wiper blades 7-32
Blade Inspection 7-32
Blade Replacement.....7-32
Wipers and Washers.....3-99
Rear Window Wiper and Washer 3-102
Windshield Washers 3-101
Windshield Wipers 3-99